NO. 78 NOTES FROM THE SHOP $3.95

Woodsmith®

DISPLAY CABINET

- *Gun Cabinet*
- *Sewing Box*
- *Box Joint Jig*

No. 78 December, 1991

Woodsmith®

Editor **Donald B. Peschke**
Managing Editor **Douglas L. Hicks**
Assistant Editors **James M. Dolan**
Gordon Gaippe
Philip A. Totten
Tim Robertson
Contributing Editor **Richard S. Peters**

Creative Director **Ted Kralicek**
Assistant Art Director **Rod Stoakes**
Senior Illustrators **David Kreyling**
Chris Glowacki
Illustrators **Dirk Ver Steeg**
Cinda Shambaugh
Photographer **Crayola England**
Design Director **Ken Munkel**
Asst. Designer **Jan Hale Svec**
Shop Manager **Steve Curtis**

Circulation Director **Liz Bredeson**
Subscription Manager **Sandy Baum**
Circulation Analyst **Jim Woodson**
Newsstand Sales **Kent A. Buckton**

WOODSMITH SOURCEBOOK
Marketing Director **Robert Murry**
Project Supplies **Leslie Ann Gearhart**
Linda Jones
Technical Support **Jonathan Garbison**
Sourcebook Advertising **Jean Myers**

Customer Service
Linda Morrow, Mgr.
Laura Bathe-McNelly
Jennie Enos
Joy Johnson
Tammi Juhl
Marci Hoober

Shipping Department
Jerry Carson, Supv.
Gloria Sheehan
Ronald Long
Donnie McVey

CORPORATE SERVICES
Controller **Paul E. Gray**
Accounting **Linda O'Rourke**
Bookkeeping **Julianne Spears**
Network Administrator **Douglas M. Lidster**
Administrative Asst. **Cheryl A. Scott**
Receptionist **Lori Seibert**
Building Maintenance **Ken Griffith**
Archie Krause

STORE MANAGERS
Des Moines, IA **Kent Welsh**
Berkeley, CA **Michael DeHaven**

Woodsmith® (ISSN 0164-4114) is published bimonthly (Feb., April, June, Aug., Oct., Dec.) by Woodsmith Corporation, 2200 Grand Ave., Des Moines, IA 50312. Printed in U.S.A.
Woodsmith® is a registered trademark of Woodsmith Corporation.
©Copyright 1991 by Woodsmith Corporation. All rights reserved.
Subscriptions: Single copy: $3.95. One year subscription (6 issues), $17.95. Two years (12 issues), $31.95. (Canada/Foreign $21.95 per year, U.S. funds.)
Second Class Postage Paid at Des Moines, IA and at additional offices.
Postmaster: Send change of address to *Woodsmith*, Box 10718, Des Moines, IA 50350.
Subscription Questions? Call 1–800–333–5075, 8:00 am to 5:00 pm, Central Time, weekdays.

EDITOR'S COLUMN

Sawdust

What keeps me in the shop late at night? Most often it's the challenge of trying to figure out a way to get something done that defies an easy answer.

That's the basis of the feature project in this issue. The Display/Gun Cabinet is a traditional design with glass-paned doors.

The fastest way to make these doors is to use a special set of router or shaper bits designed to make an interlocking molding cut on the rails, stiles, and dividers.

But we were able to figure out a way to do it with ordinary router bits. The process means cutting a few more pieces, but it gives you the same results as using an expensive set of bits.

We were also able to devise a new jig for cutting box joints (used on the Sewing Box). The jig adjusts to cut any size box joints, and solves some of the problems of typical box joint jigs.

All in all, the projects in this issue offered opportunities to come up with new solutions to old problems.

SHOPNOTES

For the past year we've been working on a special project — a new magazine. Now the first issue is about to go to press, so it's time for an introduction.

Our brand-new magazine is called *ShopNotes*, and it's dedicated entirely to your shop. It's all about woodworking techniques, jigs, shop projects, and tools — the heart of woodworking.

I have a good feeling the moment I walk into my shop. And when I get to see someone else's shop, it's a great experience. There are usually parts of projects lying around, jigs here and there that start interesting stories, and the inevitable discussions about tools.

That's the idea behind *ShopNotes*. We wanted to devote a whole magazine to working in the shop. Not always building a furniture project. Sometimes just putzing around. Maybe working on a project for the shop itself. Or, building a jig for the table saw, or making an accessory for a router.

If you like working in your shop, even if you don't have a furniture project to build, this new magazine ought to appeal to you.

If *ShopNotes* sounds like something you'd like to see, just send in the card that's in this issue of *Woodsmith* (or if the card is missing, call us at 1–800–444–7002). We'll send you the Premiere Issue of *ShopNotes* and you can become a Charter Subscriber.

NEW FACES. Of course, starting a new magazine requires a lot of work . . . and a few more people. As a few brave souls took on the task of producing *ShopNotes*, we've added a few new people for *Woodsmith*.

Terry Strohman and Cary Christensen headed up the effort of producing the first issue of *ShopNotes*. They were quickly joined by Rick Peters and Kurt Schultz, also from the *Woodsmith* staff.

But it's been fun greeting new people. We were able to hire four great folks.

Phil Totten has been a long-time reader of *Woodsmith* and was a technical writer for a computer firm. He told me about the first time he saw *Woodsmith*. He picked it up, turned to his wife and said, "Someday I'll work for this magazine." Now he's here.

Tim Robertson was also a subscriber. He taught English in a high school in Colorado, but decided to switch from the classroom to the workshop and join us.

We're fortunate to have Cinda Shambaugh's talents for the illustrations. Cinda was a freelance designer and has done drafting and design work for a timber-frame company.

And finally, you can imagine the work that goes into designing the furniture, jigs, and shop projects we feature. Jan Svec is now helping us with all of the design work. He has a degree in architecture and was working as a cabinetmaker for a local millwork company before joining our staff.

INDEX

Enclosed you'll find the *Woodsmith Sourcebook*. This time we've added an index of all the articles and projects we've featured since the first issue of *Woodsmith*. (If you bought this copy on the newsstand or the *Sourcebook* is missing, call us at 1–800–444–7002. We'll send you one free.)

NEXT ISSUE. The next issue of *Woodsmith* will be mailed by January 24, 1992.

Don

A LOOK INSIDE

Contents

Tips & Techniques 4 *Five great tips from fellow woodworkers. 1) Making a Jig for Sanding Circles. 2) Cutting Beveled Notches for Sawhorse Legs. 3) Scrapers from Japanese Saws. 4) Cutting Odd Angles. 5) Gauging the Depth of Dowel Holes.*

Display Cabinet 6 *Shop-made moldings and glass-paned doors produce a Display Cabinet with classic lines.*

Gun Cabinet 13 *Simple modifications change the Display Cabinet into a handsome case to store and display your guns.*

Matched Moldings 14 *We show how to make doors that look like they came from a cabinet shop — using two common router bits.*

Shop Notes 16 *1) How to Lay Out Dentil Molding. 2) Installing Inset Hinges. 3) Positioning Shelves in a Cabinet. 4) Cutting Half Laps on Thin Stock.*

Sewing Box 18 *The top trays pivot open to uncover a long case. It's a weekend project with lots of storage for sewing supplies.*

Box Joint Jig 24 *Accurate box joints are easier than ever. Our Box Joint Jig works on your table saw or router table.*

Making Box Joints 27 *We show techniques to make strong and attractive box joints using our adjustable Box Joint Jig.*

Sharpening Contest 28 *The results are in for our Sharpening Tips Contest. The winners: Two jigs for easy, more accurate sharpening.*

Talking Shop 30 *1) Tips on Rust Prevention in the Shop. 2) Rechargeable Batteries.*

Sources 31 *Hardware and project supplies needed for the projects in this issue.*

Oak Display Cabinet *page 6*

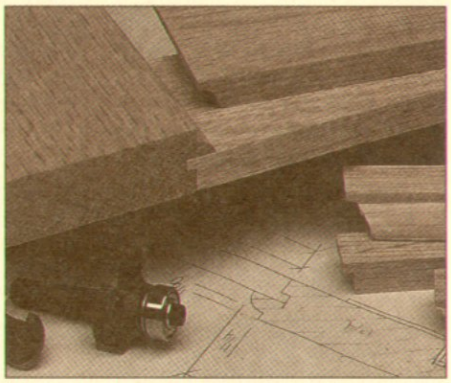

Matched Moldings *page 14*

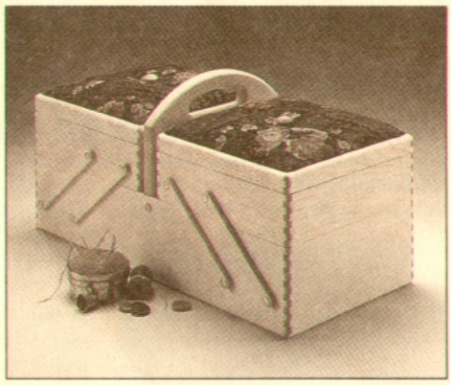

Sewing Box *page 18*

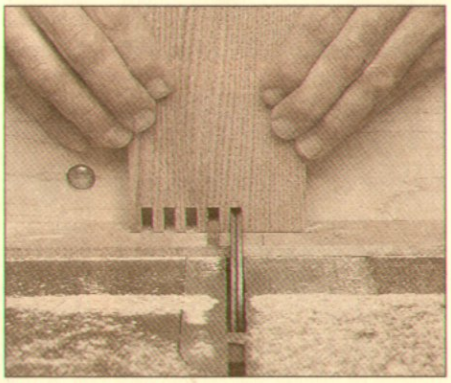

Box Joint Jig *page 24*

Tips & Techniques

JIG FOR SANDING CIRCLES

■ Sanding the edges of wheels and circles on a disc sander can be difficult — you have to rotate the workpiece evenly to avoid flat spots as you smooth out the curve. To solve the problem, I made a jig that holds the workpiece on a pivot pin so it can be easily rotated, refer to Fig. 3.

To make the jig, start by cutting a base from ¾" plywood the same size as the sander's table. Next, to keep the jig aligned with the sanding disc, mount a hardwood strip on the base that fits in your miter gauge slot, see Fig. 1.

The diameter of the wheel or circle you're making is adjustable since the pivot pin is fixed into the end of a sliding arm. And the arm fits in a groove cut diagonally across the base.

It's this diagonal groove that makes this jig work so well. It allows you to move the workpiece in small increments.

To cut the diagonal groove, I mounted the base top side down on a plywood sled. Then I cut the slot with a dado blade, see Fig. 2.

The arm is cut to fit snugly in the groove. For the pivot pin, I used a ¼" dowel.

To use the jig, clamp the base to the table so the workpiece is on the side of the sanding disc that spins down, see Fig. 3. Then mount the workpiece and slide the arm in the groove.

When the workpiece touches the disc, hold the arm in the slot with one hand. Then rotate the workpiece with the other hand as you slide the arm slightly closer to the sanding disc until the workpiece is round.

Jerome A. Jahnke
Milwaukee, Wisconsin

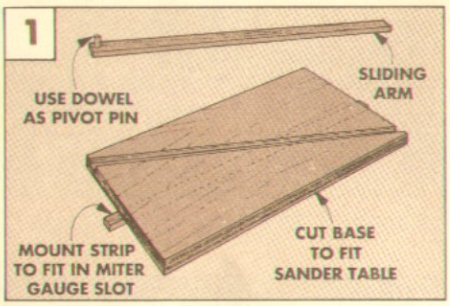

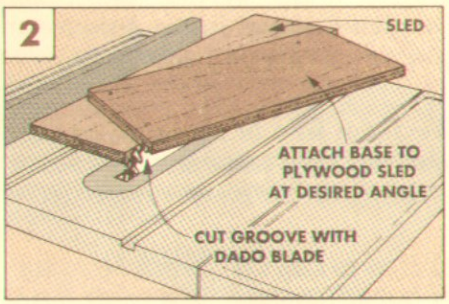

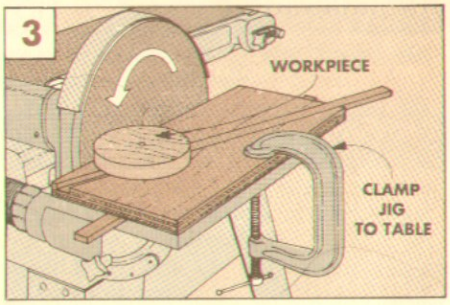

NOTCHING FOR SAWHORSE LEGS

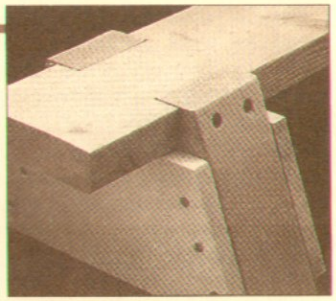

■ Building the "conventional" sawhorse shown in *Woodsmith* No. 75 wasn't difficult. The only tricky part was cutting the beveled notches for the legs in the top rail. In that issue we showed how to cut them with a hand saw and chisel. But two readers wrote in with neat techniques for cutting quick, accurate notches using the table saw and the radial arm saw.

Tom Kolar of Lafayette, California suggested cutting the beveled notches on a table saw. To do this, start by ripping 15° bevels along both edges of the top rail, see Fig. 1.

Then, to cut the notches, switch to a dado blade set at 90° and make a series of passes, see Fig. 2. By keeping the 15° beveled edges down against the saw table, you can easily cut the notches with angled bottoms.

Steve Brink of St. Paul, Minnesota didn't want to cut the leg notches by hand either. Instead, he built a simple jig to notch the top rail on a radial arm saw, see Fig. 3.

The jig consists of a stand to hold the 2x6 top rail at a 75° angle in front of the fence and a stop block to hold the rail in the proper position against the stand, see Fig. 4. Both are mounted on a ¼" plywood base.

To use the jig, set the blade 5" above the saw table. Then lean the rail against the stand and waste out the notches in a series of passes, see Fig. 4.

Note: To keep the top rail square to the blade, slip a ¼"-thick spacer under the opposite end of the rail to compensate for the thickness of the jig's base.

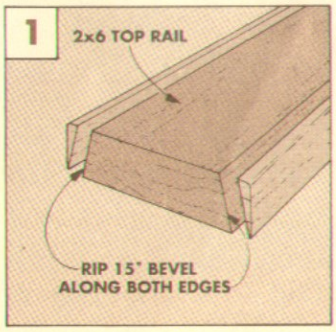

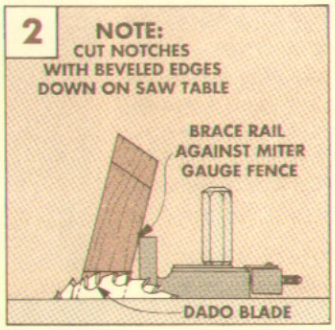

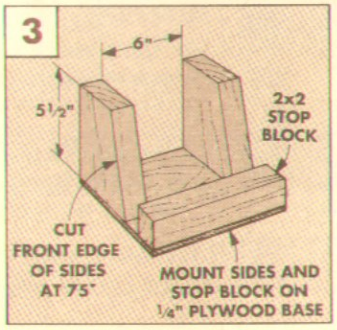

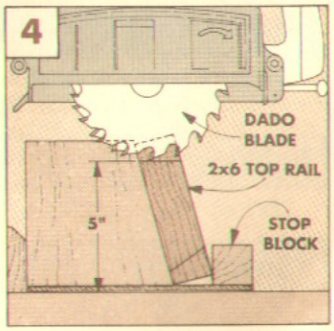

SAW BLADE SCRAPERS

■ Many Japanese hand saws come with replaceable blades. But instead of throwing away the old blades, I found a new use for them — they make great cabinet scrapers, see photo.

To make a scraper, first remove the blade from the handle and grind off the teeth. Then file off any sharp edges, and straighten the edge.

Since a full-length Japanese hand saw blade is too big to comfortably use as a scraper, I break it into three pieces. To do this, first score a line across the blade with the corner of a mill file, see Fig. 1. The scored line doesn't have to be very deep, just straight and continuous.

Next clamp the blade in a vise with the score line at the top edge of the jaws. Then bend the blade until it snaps along the line, see Fig 2. Now file off any sharp spots.

The next step is to sharpen the pieces of the blade. I do this the same way as I sharpen regular cabinet scrapers. To use my method, start by clamping a piece in a vise. Then bevel the top edge to 45°, see Fig. 3.

Once the edge is beveled, you can form a burr. To do this, slowly rub the beveled edge with a burnisher or other piece of hard smooth steel, see Fig. 4.

Start burnishing at the same 45° angle as the edge. Then gradually change the angle until the burnisher is perpendicular to the scraper, see Fig. 4. Once you can feel an even burr along the length of the edge, the scraper is ready to use.

I use all the pieces of a blade as scrapers, see photo above. The rounded ends make good convex or concave scrapers. Even the small end of the blade that fits into the handle makes a good scraper for working in tight places.

Jim Toner
San Francisco, California

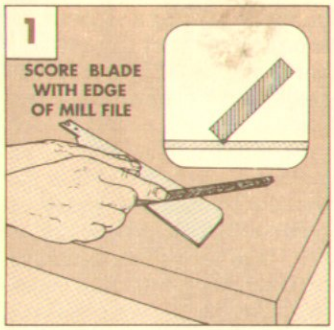

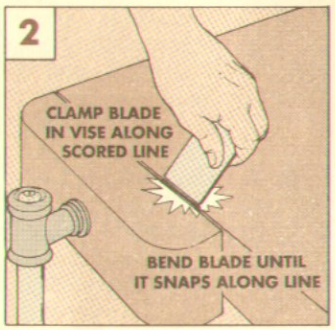

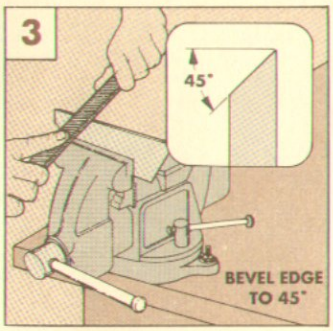

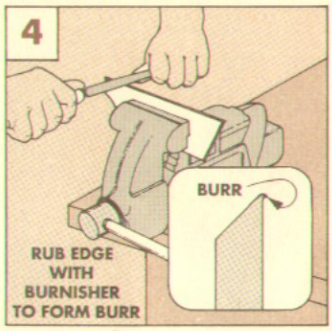

CUTTING ODD ANGLES

■ Recently, I cut some stock to fit some unusual angles. But I had a problem setting the miter gauge to make the cuts. So I came up with a simple technique to do this.

To set the miter gauge angle, I first draw the desired cut line on the stock. Then I square the line down the front and back edges of the piece, see Fig. 1a.

Next, align the squared lines on the workpiece to the side of the miter gauge slot, see Fig. 1. Then loosen the angle lock on the miter gauge and slide it up against the workpiece. Now, lock the miter gauge at that angle. Then align the cut line with the blade and make the cut.

Doug Conway
Eminence, Missouri

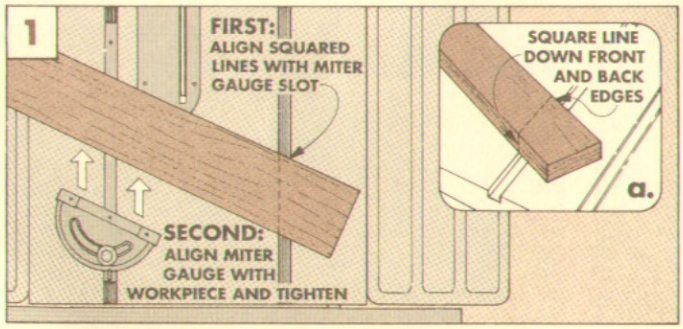

DEPTH GAUGE

■ There's nothing worse than starting to glue up a project only to discover that your dowel holes aren't deep enough — the dowels are bottoming out before the joint is closed.

To avoid this problem, you should always double check the depth of the holes by measuring them after drilling. But how do you get a ruler down into a dowel hole with such a narrow opening? I use a tire tread depth gauge, see photo.

A tire tread depth gauge has a needle-like probe that easily fits into a dowel hole. Mine is calibrated from 0" to 1" in 1/32" increments. Tire tread depth gauges are available at most auto supply stores and cost between $2.00 and $3.50.

Ken Scheiderer
Rochester, Minnesota

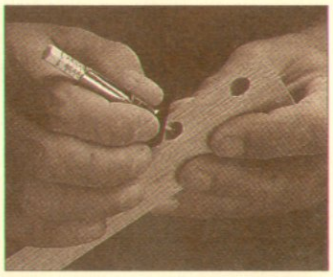

SEND IN YOUR TIPS

If you would like to share a tip or idea, just send it to *Woodsmith*, Tips and Techniques, 2200 Grand Ave., Des Moines, Iowa 50312.

We will pay (upon publication) $15 to $100, depending on the published length of the tip. Please include an explanation and a photo or sketch (we'll draw a new one).

Display Cabinet

Part of the beauty of this project is in its traditional appearance. But what you can't see are the unique router techniques that go into building the glass and raised panel doors.

The first thing you're likely to notice about this cabinet is the upper doors. Each door is neatly divided into eight glass panes. And each pane of glass is surrounded by a molded edge. But that's not what I find the most interesting. It's the details of how the doors are constructed.

How are all those parts on the door joined together? And how do you cut the inside corners on the door moldings? There must be a lot of exact miters or coped corners to cut. Or at least an expensive set of router or shaper bits. (Not at all. It's a neat technique using a router with common bits. We're offering a separate article about this technique on pages 14 and 15.)

TOP MOLDING. The door is not the only part that has interesting details. The molding at the top of the cabinet is made by building up pieces of stock on top of each other. And one of those pieces is dentil molding — and that's another intriguing story. It has to be cut to fit the width of the cabinet and the dentil blocks must be spaced perfectly so you end up with a full block on each end.

A DESIGN ALTERNATIVE. There are other interesting techniques used on this cabinet, but I should say something here about the overall design. It's designed as a display cabinet, but it could easily be converted into a gun cabinet as explained on page 13.

WOOD. For both the display cabinet and the gun cabinet I used red oak. The doors, facings, moldings, and shelves are all made of solid stock, but all the main parts are made from ¾" oak plywood. I wanted the main parts to remain flat and stable no matter what the humidity.

HARDWARE. To add a touch of class to this project, the hinges, knobs, and shelf supports are all brass. There's even nifty double-ball catches behind the doors. And, threaded inserts are used to secure the upper case to the lower case. (For hardware sources, see page 31.)

FINISH. The final important detail to any heirloom project is the finish. For the stain I used 8 teaspoons of burnt umber artist's oil, mixed in 1 quart of linseed oil. Then after 48 hours I covered it with three coats of General Finishes' Royal Finish (Satin).

SUPPLIES

- (5 pairs) Inset brass hinges with screws
- (4) ¼" Threaded inserts
- (4) ¼" x 1¼" Rh machine screws
- (4) Brass knobs
- (6) Ball catches
- (15) ¼" Shelf supports
- (2) Locks (optional)

EXPLODED VIEW

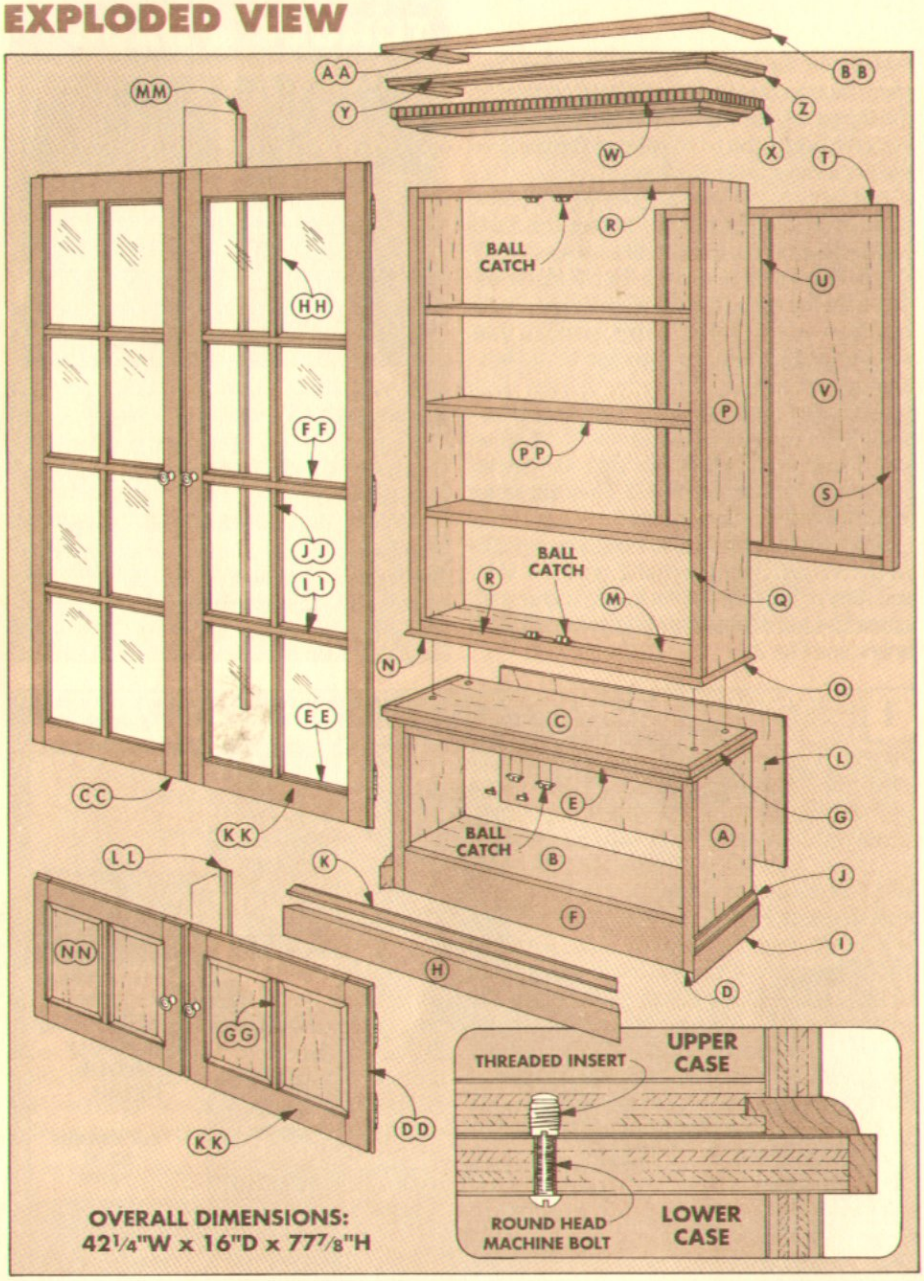

MATERIALS

LOWER CASE		
A	Sides (2)	¾ ply - 14¾ x 21⅝
B	Shelf (1)	¾ ply - 14¼ x 38¼
C	Top (1)	¾ ply - 15⅝ x 40
D	Side Facings (2)	¾ x 1 - 21⅝
E	Upper Rail (1)	¾ x 1¾ - 37¼
F	Lower Rail (1)	¾ x 4¾ - 37¼
G	Edging Strip (1)	⅜ x ¾ - 75 rgh.
H	Kickbd Front (1)	¾ x 3 - 40¾
I	Kickbd Sides (2)	¾ x 3 - 16
J	Side Moldings (4)	¾ x ½ - 16 rgh.
K	Front Moldings (2)	¾ x ½ - 41 rgh.
L	Back (1)	¼ ply - 38¾ x 22⅛
UPPER CASE		
M	Top/Bottom (2)	¾ ply - 11¼ x 37¾
N	Frame Fronts (2)	½ x 1½ - 40¼
O	Frame Sides (4)	½ x 1½ - 12½
P	Sides (2)	¾ ply - 11½ x 52
Q	Side Facings (2)	¾ x 1 - 52
R	Face Rails (2)	¾ x 1 - 37¼
S	Back Stiles (2)	¾ x 1½ - 52
T	Back Rails (2)	¾ x 1¼ - 36¼
U	Back Divider (1)	¾ x 1 - 50
V	Back Panels (2)	¼ ply - 17⅞ x 50
W	Dentil Front (1)	1½ x 1 - 40¾
X	Dentil Sides (2)	1½ x 1 - 12¾
Y	Front Trim (1)	¾ x 1¼ - 41¾
Z	Side Trim (2)	¾ x 1¼ - 13½
AA	Front Cap (1)	¾ x 1½ - 42¼
BB	Side Caps (2)	¾ x 1½ - 13½
DOORS		
CC	Upper Stiles (4)	¾ x 2½ - 50½
DD	Lower Stiles (4)	¾ x 2½ - 15⅝
EE	Rails (8)	⅜ x 2¼ - 14½
FF	Horiz. Dividers (6)	⅜ x ½ - 14½
GG	Lr. Ver. Dvdrs. (2)	⅜ x ½ - 15⅝
HH	Up. Ver. Dvdrs. (2)	⅜ x ½ - 50½
II	Horiz. Caps (6)	⅜ x 1 - 14¼
JJ	Vert. Caps (10)	⅜ x 1 - 11⅛
KK	Rail Caps (8)	⅜ x 2½ - 14¼
LL	Lower Astragal (1)	⅜ x ¾ - 14⅞
MM	Upper Astragal (1)	⅜ x ¾ - 49¾
NN	Panels (4)	⅝ x 6⅞ - 11⅛
OO	Glass Stop	¼ x ¼ - 70 Lin. Ft.
PP	Shelves (3)	¾ x 10¼ - 37¾

CUTTING DIAGRAM

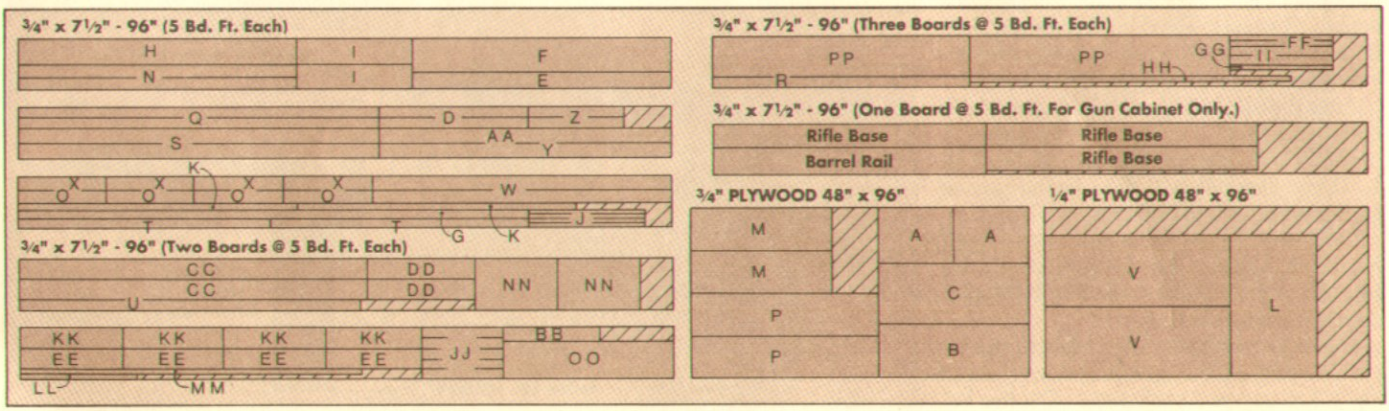

LOWER CASE

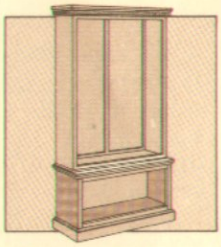

The display cabinet is constructed by stacking a tall case on top of a short case. Plywood was used for the sides and backs, and then I covered the exposed plywood edges on the front with solid wood strips.

The lower case is trimmed out at the bottom with a kickboard and molding strips to give the appearance of having a base. It's an easy way to get the look of a base without the extra steps needed to build one.

I began work on the cabinet by building the lower case. It starts out with two sides that are mirror images of each other. The sides are joined by a shelf to form an "H" shape, and then a top is added to help hold the assembly together, see Fig. 1.

SIDES AND SHELF. Start by cutting two **sides (A)** for the lower case from 3/4"-thick plywood, see Fig. 1. Then cut another piece of 3/4"-thick plywood for the **shelf (B)**. (Note the grain direction. I think it looks best if it runs vertically on the sides and along the length of the shelf.)

DADO FOR SHELF. After the sides and shelf have been cut to finished size, cut a 1/4"-wide dado across the *inside* face of each side piece. These dadoes will receive tongues cut on the shelf, see Fig. 1. (Why not just eliminate the tongues and cut the width of the dado the thickness of the plywood shelf? There are a couple of reasons, see the box in the upper right-hand corner.)

To cut the dadoes, you can use either a table saw with a dado blade or a 1/4" straight bit on the router table. To allow the shelf to pull up tightly to the sides during assembly, cut the dadoes slightly more than 1/4" deep as shown in photo (b) in the box at upper right-hand corner.

TONGUES. Now you can cut the tongues on the shelf (B) to fit the dadoes. The tongues are formed by cutting two rabbets on each end of the workpiece, see Fig. 1b.

To do this I mounted a 1/2" straight bit in the router table. Then I cut the tongues in a couple of passes, sneaking up on the final depth until the tongue just fits the dado in the side panels.

After the tongues have been routed on the ends of the shelf, rout a tongue the same size on the *front* edge of each side (A), see Fig. 1. These tongues will hold facing pieces added later, refer to Fig. 3.

CASE TOP. Once the tongues have been routed on the sides, the next step is to cut the **top (C)** to finished size, see Fig. 1. (Again, note the grain direction.)

RABBETS FOR BACK. Now rabbets can be cut along the *back* edge of the sides (A) and top (C) to accept a back panel. Cut the 1/4" rabbets on the *inside* face of the sides (the same face as the shelf dado) and *bottom* of the top panel, see Figs. 1 and 1a. Note: Don't cut a rabbet on the back edge of the shelf — the back extends to the floor.

HOLES IN TOP. There are two sets of holes to be drilled in the top (C) before the case can be assembled. First, drill a series of 3/16" shank holes near each side for woodscrews that hold the top to the sides, see Figs. 2 and 2a. Then drill four 5/16" holes for bolts that will be used to hold the top case to the bottom case, see Fig. 2.

ASSEMBLY. Now the lower case can be assembled. I did this in two steps. First, glue and clamp the shelf in the side dadoes to form an "H" shape, see Fig. 2. Then check to make sure the case is square.

Next, position the top (C) on the sides (A) so there's an even overhang on each side and they're flush in the back. Then glue and screw the top down through the pre-drilled holes, see Fig. 2a.

TONGUE & DADO

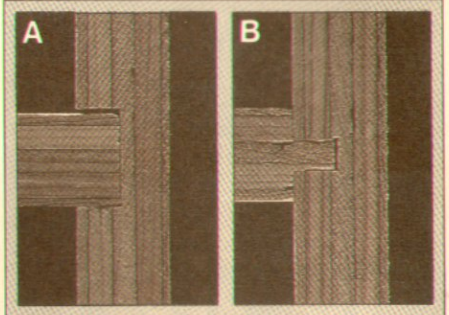

There are many different ways to join shelves to cabinet sides. A full width dado (photo a.) works fine, but if the shelf doesn't fit exactly there will be a gap above the shelf.

The tongue and dado joint (photo b.) looks better because it hides any gap above the tongue of the shelf. It also covers up splintering that may occur at the edge of the dado.

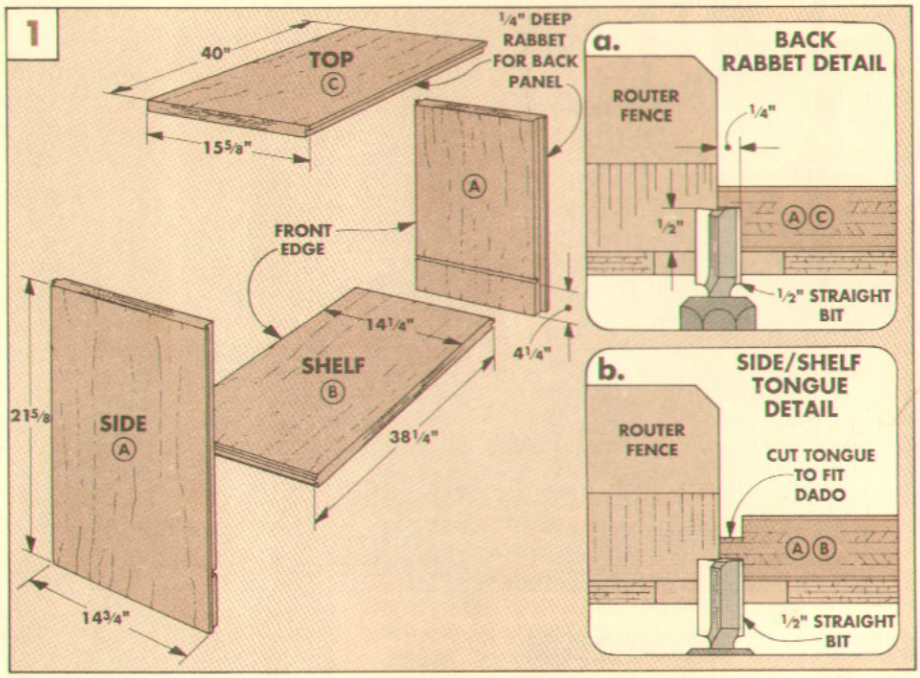

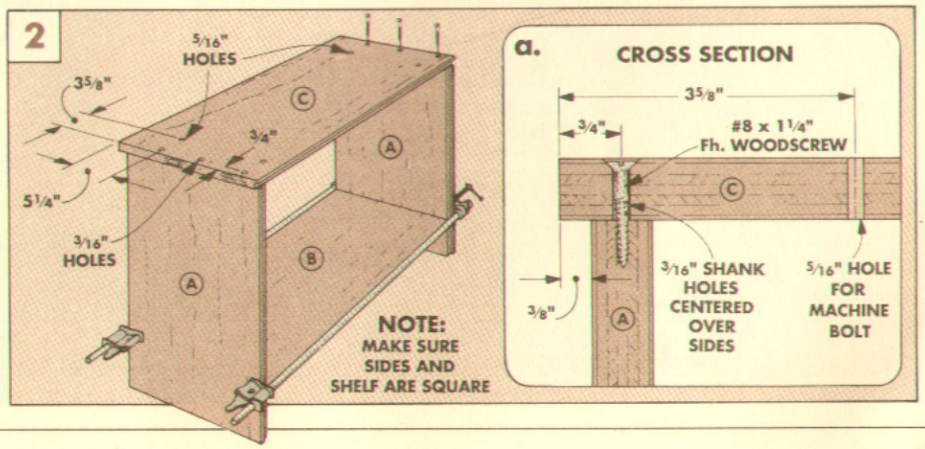

FACING AND RAILS

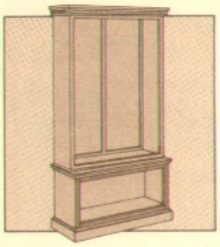

The next step on the lower case is to add the facing pieces to the side panels, and also add the rails between each facing.

SIDE FACING. First rip two **side facing (D)** pieces to final width (1"), see Fig. 3a. Then cut the pieces to the same length as the sides, see Fig. 3.

Next, cut a groove on the back side of each facing to fit the tongues on the plywood, see Fig. 3a. (To make sure they fit the tongues, I used the same dado blade I used for the shelf dado.) Then glue the facings in place.

UPPER AND LOWER RAIL. Cut an **upper rail (E)** and a **lower rail (F)** to fit between the facings, see Fig. 3. Glue and screw the upper rail under the top (C). Then glue the lower rail to the shelf, and screw it to the facing, see Fig. 3b.

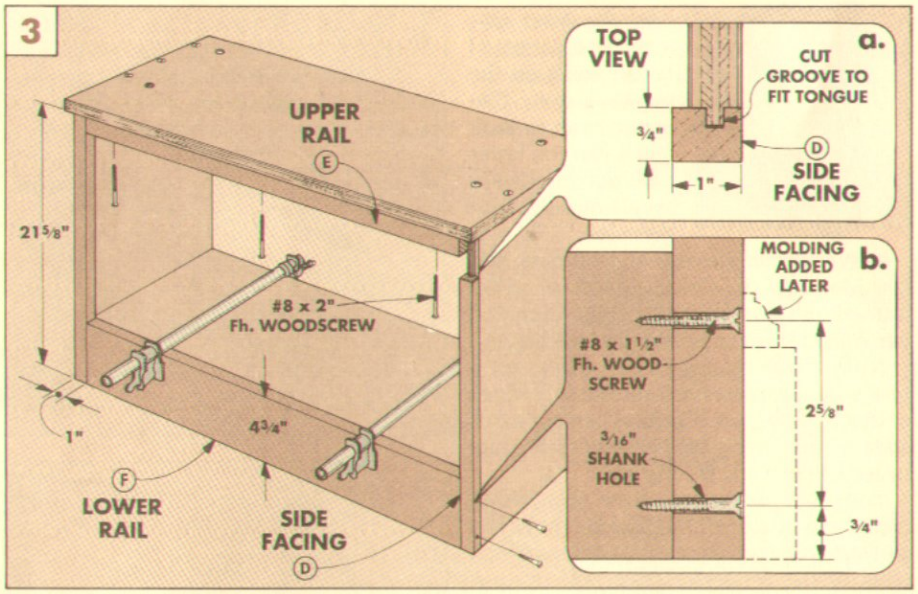

MOLDING AND KICKBOARD

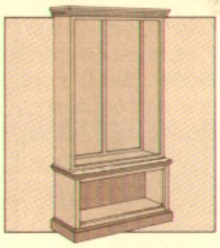

Next I added edging strips, a kickboard, and molding to give the lower case a finished look. All three are mitered, and cut flush with the back.

EDGING STRIP. To hide the edges of the plywood top, I glued ⅜"-thick **edging strips (G)** to the front and sides, see Fig. 4. Start by ripping a blank to width the same thickness as the top, see Fig. 4. Then rough cut the strip into three pieces.

Next, miter both ends of the front strip to length to fit across the front edge of the plywood top, see Fig. 4. Then glue it in place. Now miter the front ends of the side strips, and cut the back ends flush with the back. Then glue these strips in place.

KICKBOARD. To make the kickboard, rip three pieces of ¾"-thick stock to width and rough length, see Fig. 4. Next, miter the **kickboard front (H)** and **kickboard sides (I)**. To complete the kickboard, cut the back edges flush with the back. Then glue and clamp the pieces to the lower case.

ROMAN OGEE MOLDING. I added strips of Roman ogee molding to the top edge of the kickboard and under the top (C), see Fig. 4. The safest way to make molding is to start with wider pieces, see Fig. 5. (I used 1¼"-wide blanks.) Rip enough stock to make four **side molding strips (J)** and two **front molding strips (K)**.

Next, rout a Roman ogee on the outside edge of each strip, then rip the molding to a finished width of ½", see Fig. 5. Cut the molding strips to length, then glue and clamp them in place, see Fig. 4.

BACK. The final step on the lower case is to add the **back panel (L)**. Measure between the rabbets on the sides, and between the rabbet on the top and the floor. Cut the back to size, then screw it in place.

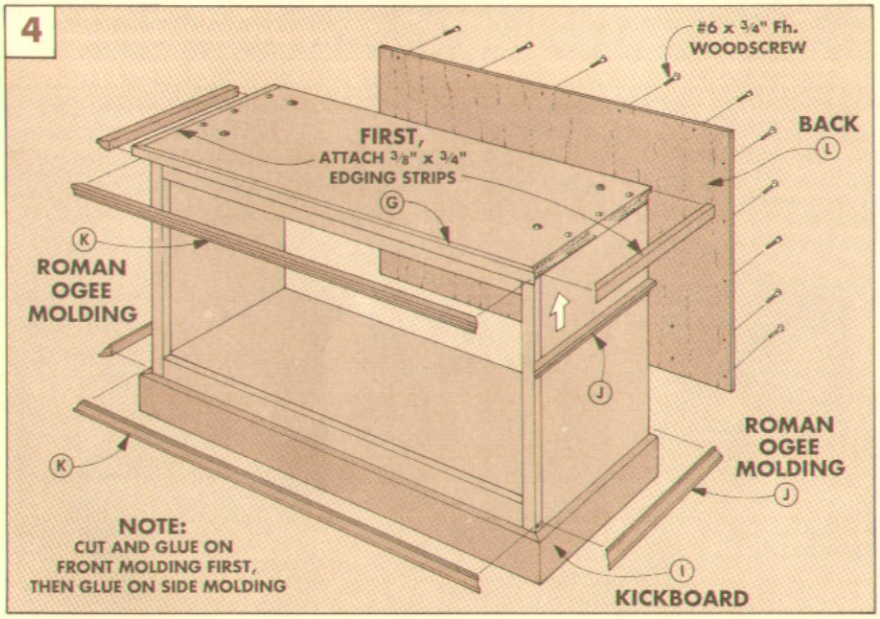

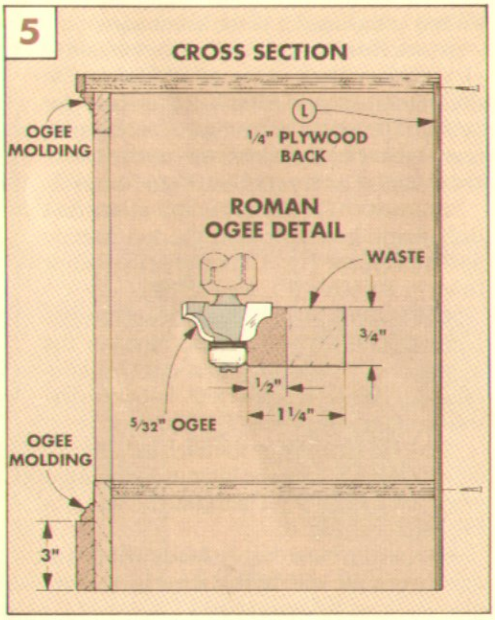

UPPER CASE

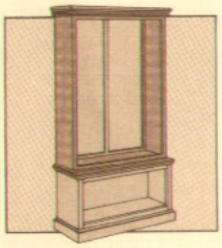

After the lower case was complete, I began work on the upper case. The upper case is built much like the lower case, but the shelves aren't dadoed into the sides.

TOP/BOTTOM. The **top** and **bottom (M)** are identical. Each is a plywood panel framed on three sides. To build them, cut two ¾" plywood panels to size, see Fig. 6.

Next, to accept the frame pieces, cut a groove centered on the front and side edges of the plywood, see Fig. 6a. Then cut a ¾"-wide rabbet on the back edge of each panel to accept the back, see Fig. 6b.

TOP/BOTTOM FRAME. Now the frame pieces can be added. The **frame fronts (N)** and **side (O)** pieces are a little different than usual — they're only ½"-thick. Since the plywood is ¾"-thick, a rabbet will be formed when these frame pieces are glued to the panels, see Fig. 6. This rabbet will accept the sides and front faces of the case.

After cutting the frame pieces to width, rout a ½" round-over on one edge of each piece, see Fig. 6a. Then cut a rabbet on the *opposite* edge, to create a tongue that fits the groove in the top/bottom (M).

After the tongues are formed, miter the frame pieces to fit the panels, see Fig. 6. Then cut the ends of the frame sides (O) flush with the back edge of each panel.

THREADED INSERTS. After gluing the frame in place, threaded inserts can be installed in the bottom panel to connect the two cases, see Fig. 8a. To locate the inserts, center the bottom panel on top of the lower case while making sure the back edges are flush. Then mark through the holes you've drilled in the top (C) of the lower case.

SIDES. Now you can start on the two **sides (P)**. First cut two pieces of ¾" plywood to final dimensions, see Fig. 7. Cut tongues for facing (Q) on the front edge of each panel, and a rabbet for the back frame on the *inside* back edge of each panel, see Figs. 7a and 7b.

ASSEMBLY. To assemble the case, first drill shank holes through the top/bottom assemblies, see Fig. 8. Then glue and screw them to the sides (P), see Fig. 8a.

SIDE FACING. To hide the edges of the side panels, glue a 1"-wide face frame to the upper case. To do this, first cut two **side facings (Q)** to length to fit between the top/bottom (M) panels, see Fig. 8.

Next, cut a groove on the back face of each side facing (Q) to fit the tongue on the front edge of the sides (P). Then glue the facing to the sides, see Fig. 8.

FACE RAILS. Now cut two **face rails (R)** to fit between the side facing, see Fig. 8. Then glue and screw them in place.

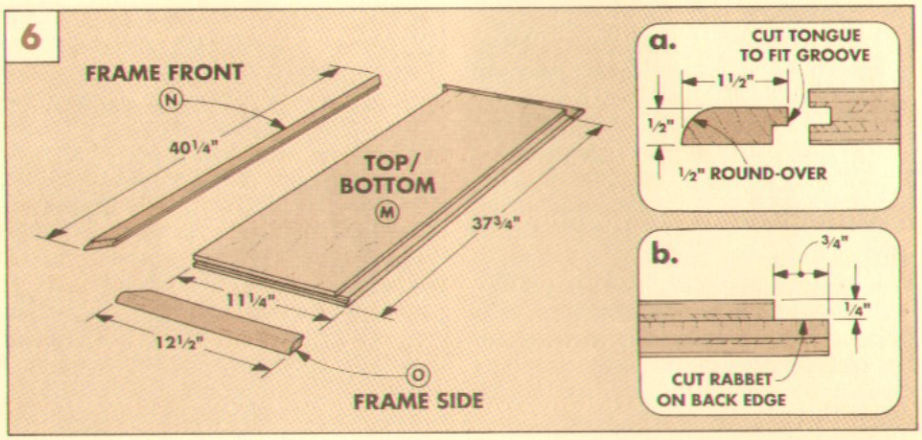

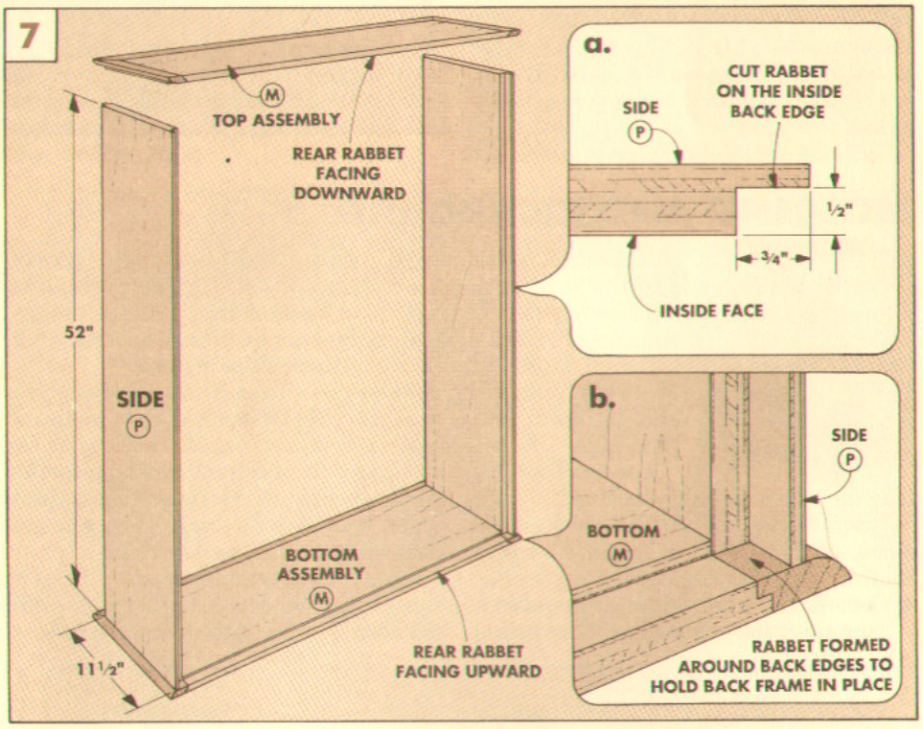

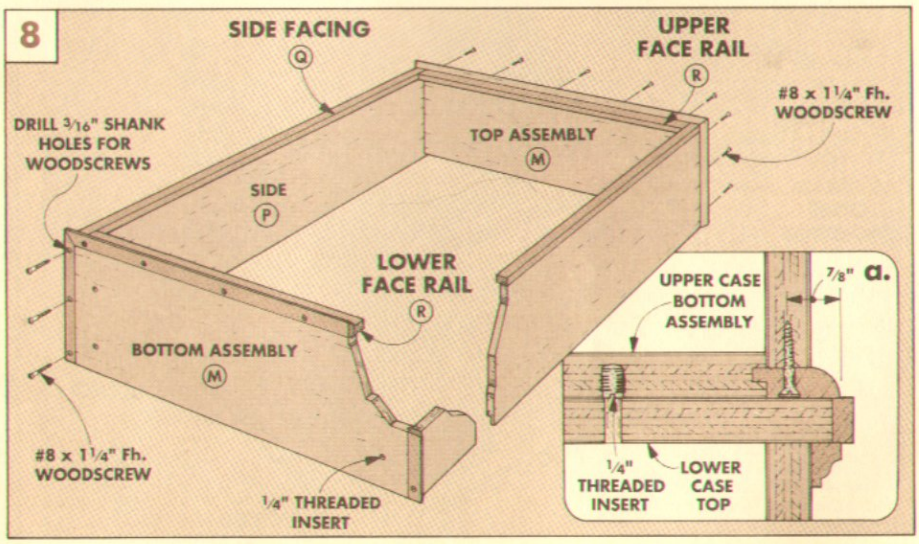

BACK FRAME

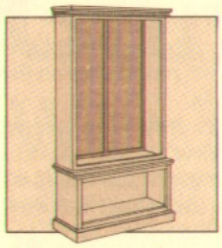

Once the top, bottom, and sides of the upper case are assembled, the next part to build is the back. The back consists of two ¼" plywood panels in a frame, joined with stub tenons and grooves.

FRAME. To build the frame, first rip the **stiles (S)**, **rails (T)**, and **divider (U)** to final widths, see Fig. 9. (Notice they're all different widths.)

To determine the rough length of these pieces, measure the opening in the back of the cabinet (from rabbet to rabbet), and add 1". Now cut the pieces to this rough length. (They'll be cut to finished length later.)

Next, cut a groove centered on the *inside* edge of each piece to accept the plywood back panels, see Fig. 9a. On the center divider (U) cut the groove on both edges.

Now the pieces can be cut to length. First, cut the stiles to fit the height of the opening (52"), and dry clamp them in place. To determine the length of the rails (T), measure the distance between the stiles (S) plus the depth of both grooves, see Fig. 9.

After the rails are cut to length, dry clamp them in place. Then determine the length of the vertical divider (U), by using the same procedure as the rails, see Fig. 9.

STUB TENONS. Now cut stub tenons on the ends of the rails (T) and divider (U) to fit the grooves, see Fig. 9a.

PANELS. Next, dry clamp the frame in the cabinet to determine the final dimensions of the **back panels (V)**, see Fig. 9. Cut the back panels (V) from ¼" plywood to final dimensions, and glue the frame and panels together, see Fig. 9. Then glue and screw the back frame in place, see Fig. 9b.

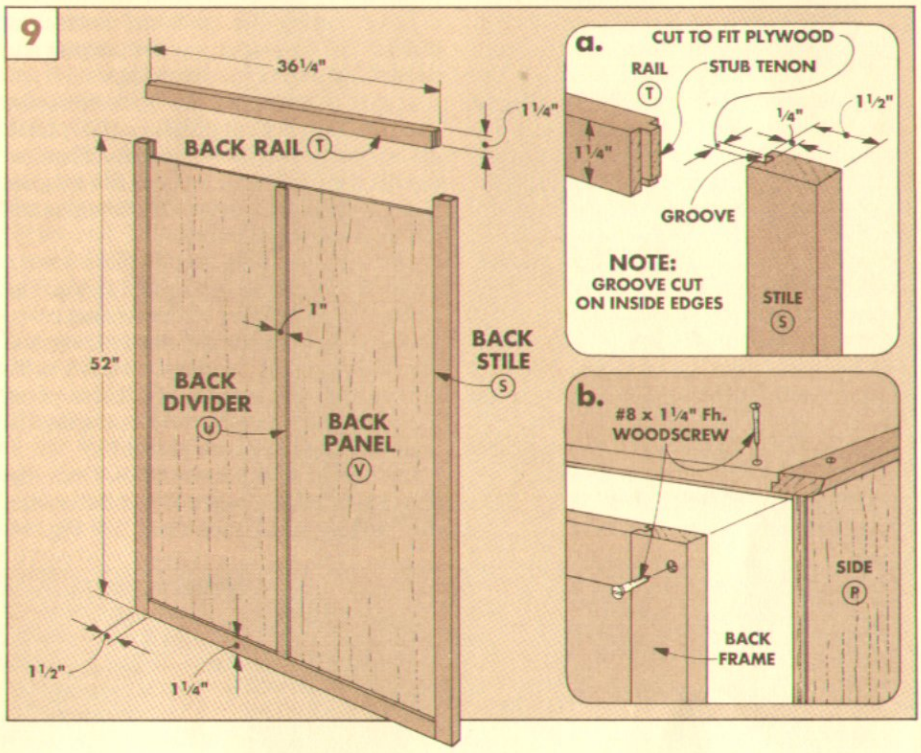

MOLDING

The final step on the upper case is to add the molding to the top of the cabinet. The molding is built up of three different strips: a dentil molding, a Roman ogee molding, and a square edge cap, see Fig. 11. The trickiest of the three is the dentil molding.

DENTIL MOLDING. I wanted the blocks in the dentil molding to be equal in width and evenly spaced apart. I also wanted full blocks on both ends, see Fig. 10.

I made the blanks for the **dentil front (W)** and **side (X)** pieces from two pieces of ¾"-thick stock glued together, see Fig. 11a. (Or you could use a single piece of 1½"-thick stock.) Lay out the dentil blocks on each piece and then cut the grooves. For more information, see Shop Notes, page 16.

After you're finished cutting the grooves, miter the dentil pieces to fit around the front and sides of the cabinet, see Fig. 10. Then glue and screw them down, see Fig. 11a.

TOP MOLDING. I found it easiest to make the Roman ogee molding pieces, and glue them to the square edge caps before cutting them to final length. To make the the **front (Y)** and **side (Z) ogee trim** pieces, first rout a Roman ogee profile into the edge of 1¼"-wide stock, see Fig. 11a.

Now you can cut the pieces for the **front (AA)** and **side (BB) caps** 1½" wide. Then glue and clamp the caps to the ogee trim pieces with the back edges flush, see Fig. 11a. After the glued-up pieces are dry, miter them to fit on top of the dentil molding.

CABINET ASSEMBLY. After the top molding is glued and screwed in place, set the upper case on top of the lower case. Then fasten the two cases together using ¼" machine screws to fit the threaded inserts.

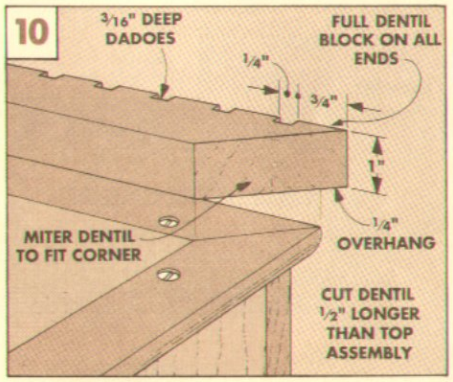

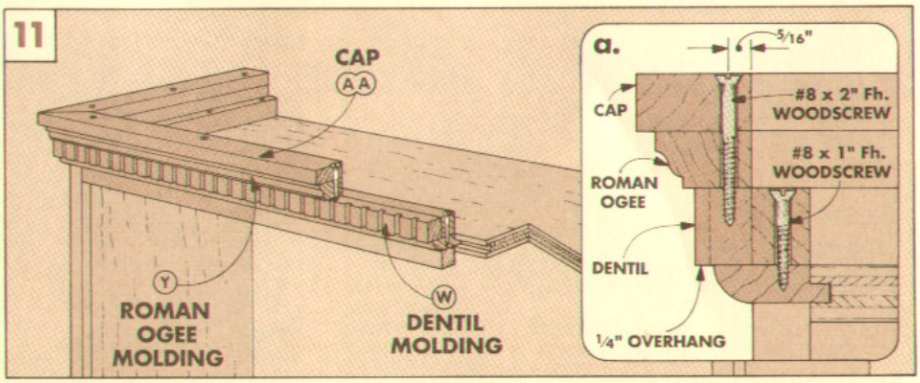

DOORS

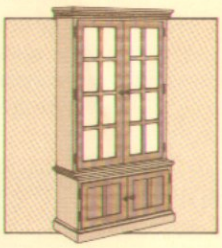

The doors offered the biggest challenge on the display cabinet. (For an explanation on joining the door parts, see page 14.)

DOOR STILES. Even though the upper doors and lower doors are different sizes, the approach to building them is the same. To determine the length of the **stiles (CC, DD)**, first measure the height of the door opening. Then add ½" since the doors are lipped with a ¼" overlap, see Fig.12.

Next, cut a groove and round over the *inside* edge of each stile, see Fig. 12a.

DOOR WIDTH. To determine the length of the rest of the door pieces, start by measuring the width of the opening and divide this measurement in half for the two doors (in my case, 18⅝").

Now subtract half the gap you want between the two doors (1/16"). Then add the overhang for the inset hinges (3/16"). This made the width of each door 18¾".

RAILS AND DIVIDERS. Then, to determine the length of the **rails (EE)** and **horizontal dividers (FF)**, lay out two stiles with the routed edges facing in as in the finished door (18¾" apart), see Fig. 12. Now measure between the grooves.

After cutting the rails and horizontal dividers to this length, cut the tongues and dadoes on each as shown on page 15.

VERTICAL DIVIDERS. To determine the length of the **vertical dividers (GG, HH)**, dry assemble the stiles and rails. Then cut the dividers to length and cut the tongues and half-lap joints, see page 15. Now glue and clamp the pieces together.

CAPS. All the rails and dividers have a **molded cap (II, JJ, KK)** glued on top. The caps are rounded over on the top and coved on the ends to match the molded edges of the stiles and rails, see Figs. 13 and 13a. To determine the length of all the caps, measure your assembled door. (Again this is all explained on pages 14 and 15.)

OVERHANG AND ROUND-OVER. Once the door is assembled, rout a ⅜" rabbet around the *back* edges of each door, see Fig. 14. This will form a ¼" overhang and leave ⅛" clearance between the door and the cabinet opening. Next, rout a ¼" round-over on the *front* edges, see Fig. 14a.

ASTRAGAL. The next step is to add an **astragal (LL, MM)**. What's an astragal? It's the strip that hides the gap when the doors are closed. Glue it into the rabbet in the left door, see Figs. 14 and 14a.

HANG DOORS. Before installing the glass and panels in the doors, I positioned the hinges and drilled the hinge screw holes. (For a tip on doing this, see page 16.) Then, remove the hinges to mount the glass and raised panels.

PANELS, STOPS, HARDWARE. To dress up the bottom doors, I made ¾"-thick raised **panels (NN)**. They're "raised" on both faces with a ½" core box bit, see Fig. 15a. I held the panels and glass in place with quarter-round **glass stop (OO)**, see Fig. 15b. After the doors are rehung, install the knobs and door catches.

SHELVES. Finally, glue up and cut stock for three **shelves (PP)**. For information on locating the shelves, see Shop Notes, page 17.

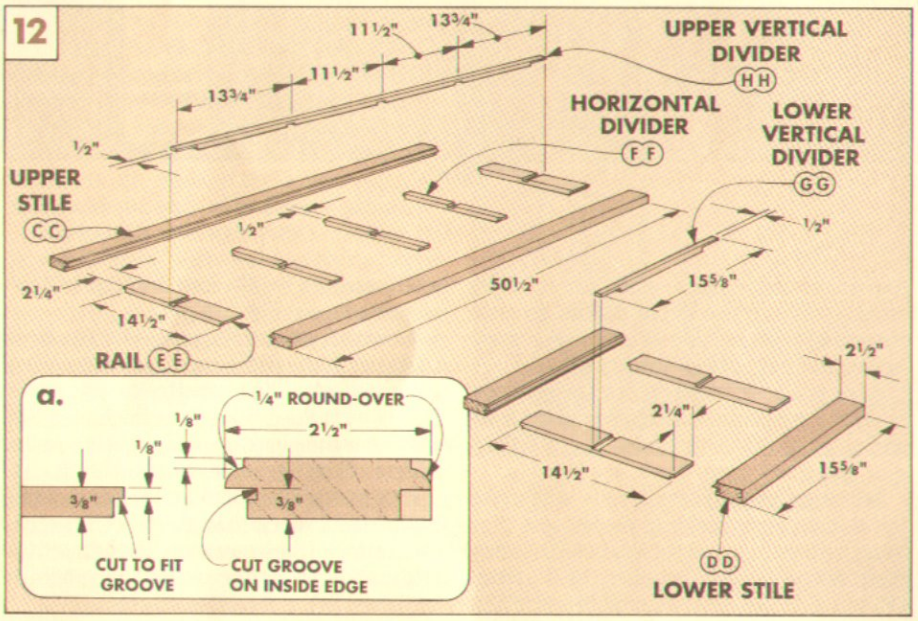

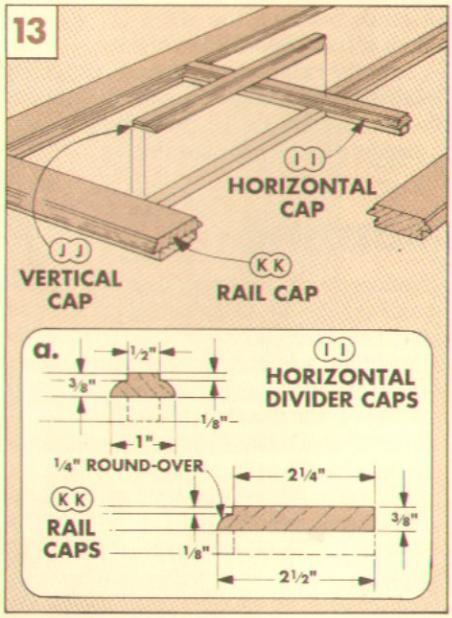

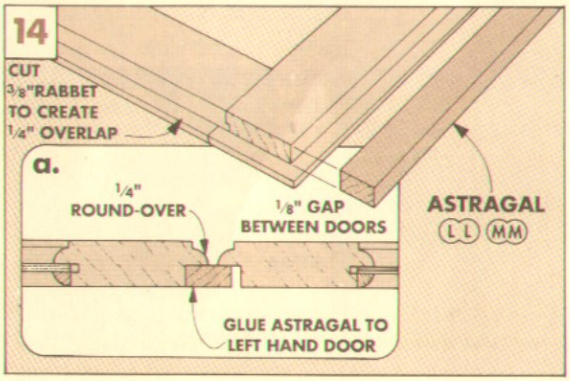

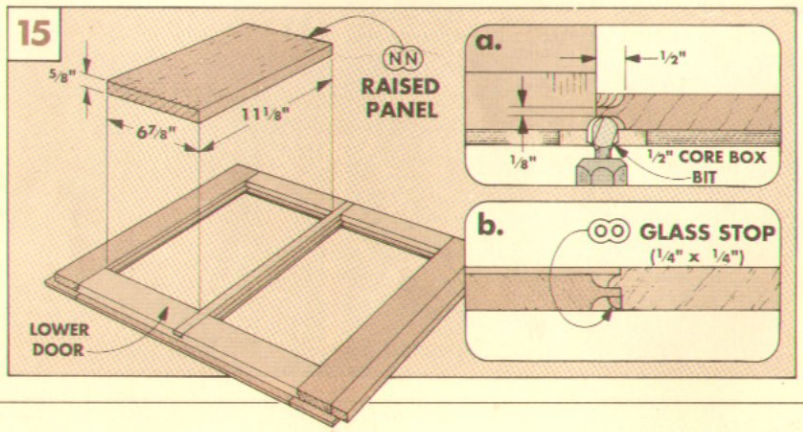

Gun Cabinet

With a few changes, the Display Cabinet shown on page 6 can be used to show off a collection of rifles.

UPPER DOORS. One major change I made to turn the cabinet into a gun cabinet is the upper doors. To offer a better view, I used a single sheet of glass without dividers in each door instead of eight panes. The stiles and rails remain the same as on the Display Cabinet.

LOCKS. Another change on the doors is to add locks. To help keep the guns and ammunition secure, I installed locks on the upper and lower right-hand doors, see Fig. 3. Each lock is mortised into the back of the door rail, and hooks over a strike plate on the back of the cabinet face rail, see Fig. 3a. With the right-hand doors locked, the left-hand doors are locked securely in place by the astragals.

TWO-PART RACK. The major change on the inside of the cabinet is the addition of a two-part rack to support guns, see Fig. 1.

I based the dimensions for the rack on standard rifle barrels and butts, see Fig. 1. If you have a gun that's unusual, then you may have to modify the rack.

BARREL RAIL. To build the barrel rail, first cut a piece of ¾"-thick stock to width, see Fig. 1. Then, to determine the length, measure the distance between the sides in the upper case.

After cutting the rail to length, cut three notches along the back edge of the barrel rail to fit around the stiles and divider in the back frame, see Fig. 1.

The barrels rest in notches cut in the front of the rail. To make the notches, first drill 1" holes as shown in Fig. 1. Now cut up to the holes to complete the notches. Then round over the top and bottom edges of each notch and the front edges of the rail with a ¼" round-over bit.

I screwed the barrel rail in place through the back frame about two-thirds of the way up on the upper case, see Fig. 2. (You may need to reposition yours.)

RIFLE BASE. The rifle base is cut from a piece of ¾"-thick edge-glued stock. Cut it 9" wide and to length to fit inside the upper case, see Fig. 1.

After the rifle base is cut to size, lay out and cut the slots for the rifle butts, see Fig. 1. I rounded over the top edges of each slot and the front edge of the base piece with a ¼" round-over bit. Finally, screw (don't glue) the base in place from the bottom of the upper case.

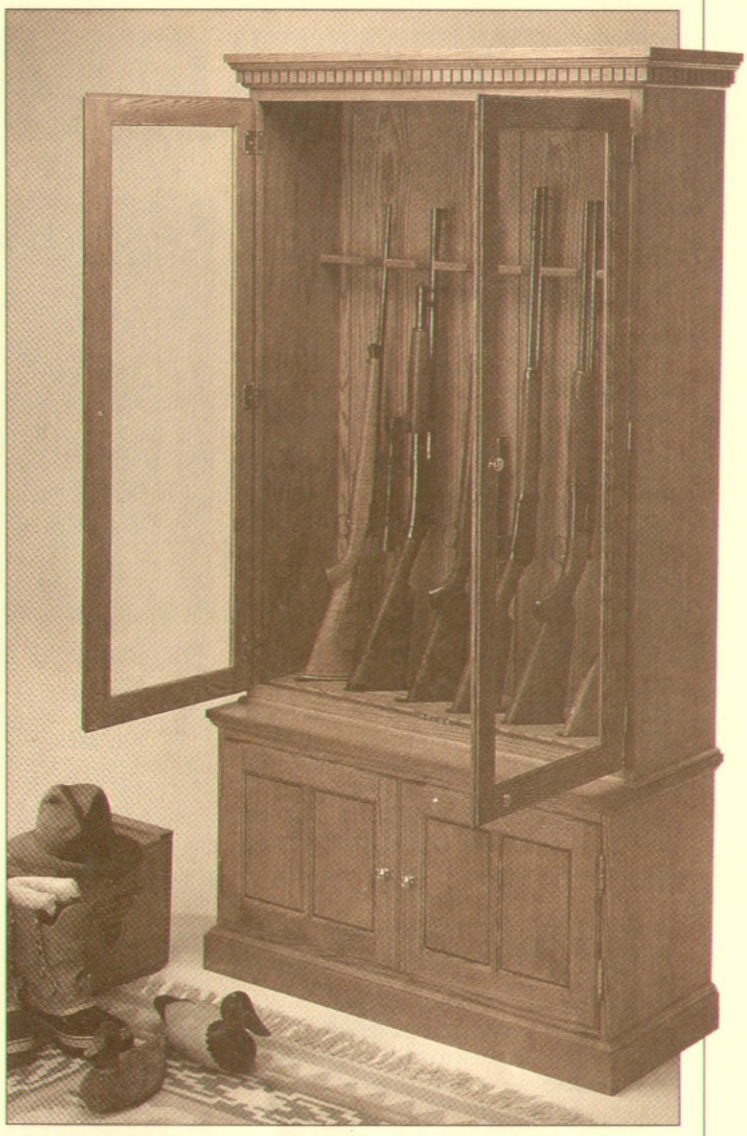

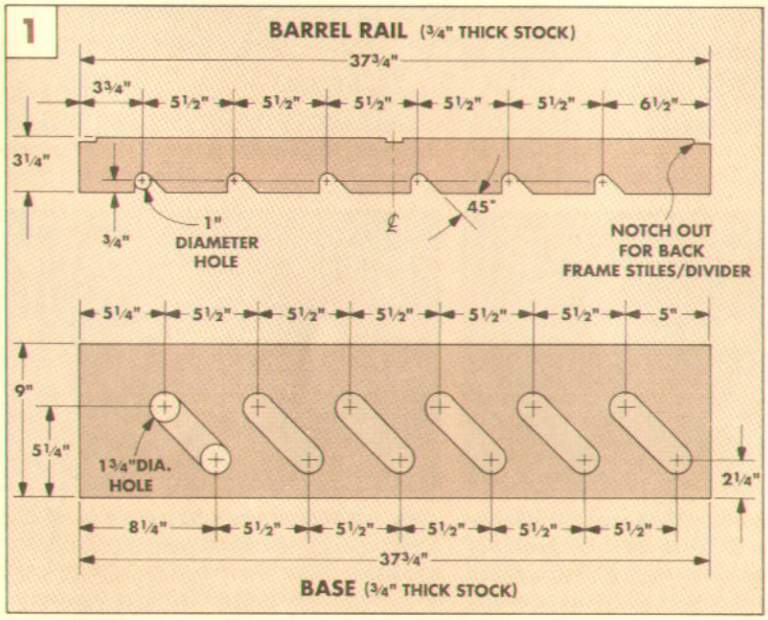

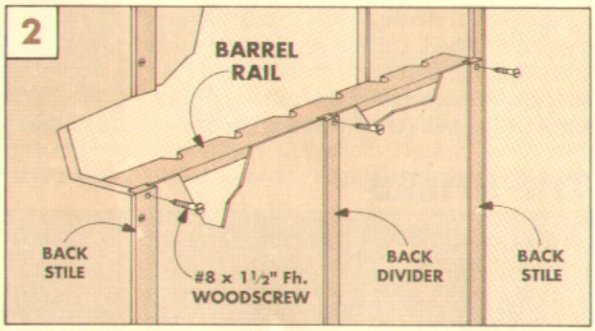

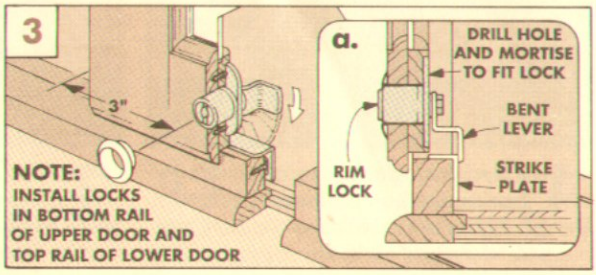

Matched Moldings

I always admire the tight fitting joints on a well-built cabinet door. If it's a glass or wood panel door with dividers, as on the Display Cabinet on page 6, I'll spend as much time looking at the coped and mitered joints as I do at what's on display.

To build a door like this, you could either hand-cut the coped miters, or use an expensive set of router bits. Instead, I use another technique for making matched molding joints. At first, it may look complicated (there are a lot of pieces), but it's not difficult.

The key to this technique is in the rails and dividers. Each rail and divider consists of two separate pieces of wood (a 3/8"-thick bottom divider or rail and a cap) glued together to look like one, see photo.

Why go to the trouble of making rails and dividers out of two pieces? The biggest advantage is that you can break the operations on these pieces down into three separate steps. First, tongues are cut on the bottom pieces. Then round-overs are routed along the inside edges of all the pieces. And, finally, the ends of the caps are "coped" with a core box bit to match the round-overs.

When all these pieces are glued up, the parts should mate together perfectly. The tongue on the divider or rail fits into a groove cut in the stile. And the decorative round-over on the stile fits into the coped end of the cap like a nut in a shell, see detail at right.

Using this matched molding technique to build a divided door requires a few more pieces (and steps) than a typical door frame. To keep them all organized, I just take it a step at a time, starting with the stiles. When they're finished, cut the dividers and join them into a grid, refer to the Dividers/Grid section. Finally, make the caps and glue them to the grid, refer to the Caps section.

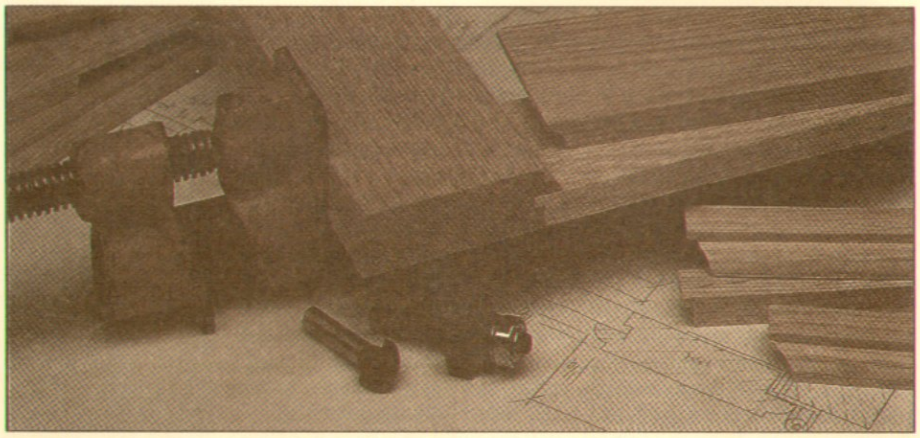

EXPLODED VIEW

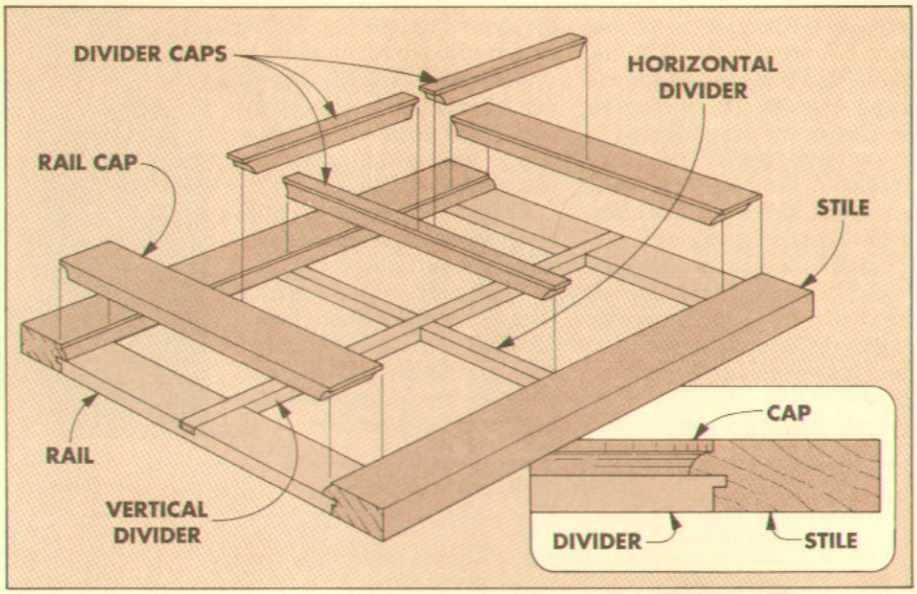

THE STILES

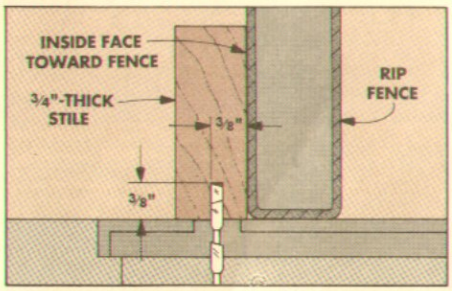

1 *First, lock down the rip fence 3/8" from outside of saw blade. Then, with the inside face of the stile against the fence, cut a 3/8"-deep kerf on inside edge of stile.*

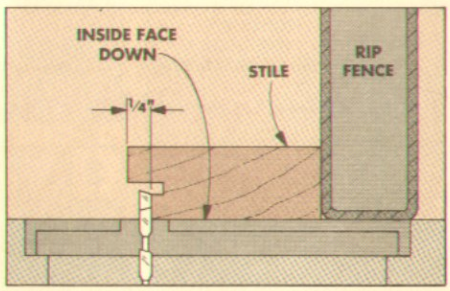

2 *Next, trim 1/4" off the back inside edge of each stile. To do this, set height of blade to just cut into kerf. Position fence and let the trimmed piece fall to waste side.*

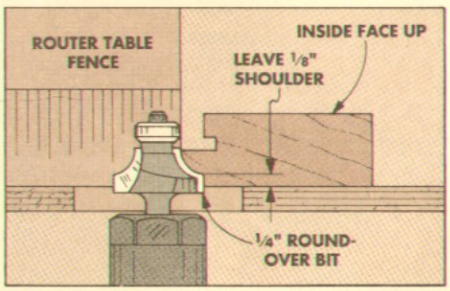

3 *Mount 1/4" round-over bit in router table, and adjust height to leave 1/8" shoulder. Then rout inside edge of each stile. (Save set-up for routing cap pieces.)*

THE DIVIDERS/GRID

The bottom dividers and rails separate the glass panes or panels of the door and hold the frame together. The first step (Step 4) is to cut tongues on the ends of each piece. Then, half-lap joints are cut (Steps 5 and 6), and the pieces are assembled in a grid. Finally, the grid is glued to the stiles (Step 8).

To determine the length of the horizontal rails and dividers, begin with the final outside measurement of your door. Then subtract the width of the two stiles, and add 3/4". (This takes into consideration the 3/8"-deep kerf that was made on the two stiles, as shown in Step 1.) The vertical divider is the same length as the stiles.

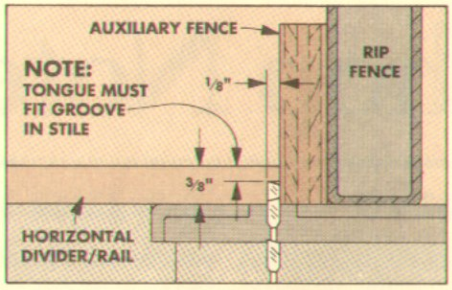

4 *To cut the tongues on the dividers, clamp an auxiliary fence to the rip fence. Then set fence 1/8" away from the outside edge of the blade, and make the cut.*

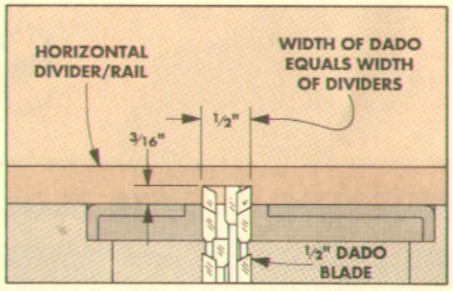

5 *Center a half lap on the length of each horizontal divider/rail. To cut these, set height of 1/2" dado (or width of your dividers) to half the thickness of your stock.*

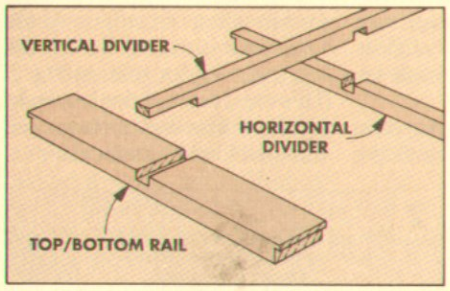

6 *Cut matching half laps on vertical divider with same dado set-up. End half laps at top and bottom are longer to fit wider top and bottom rails.*

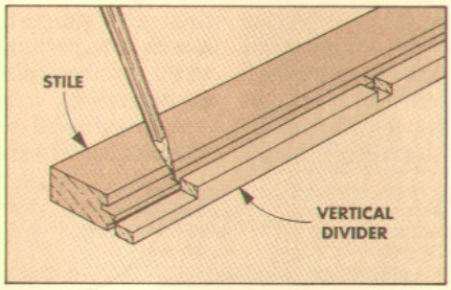

7 *To help position horizontal dividers for assembly, use the vertical divider as a "story stick." Mark location of each half lap on back inside edge of the stile.*

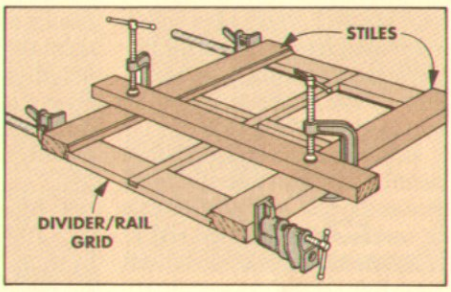

8 *First, glue up the dividers and rails into a grid. Then glue stiles to the grid. To keep the corners from lifting, clamp a flat piece of wood across the stiles.*

THE CAPS

Once the frame is assembled, the last steps are to add the caps and insert the glass panes or wood panels. The purpose of the caps is to stiffen the frame and match the molding to the decorative round-over on the stiles.

To determine the thickness of the caps, measure from the front face of the stile down to the grid (3/8" in my case).

In a divided door, the horizontal and vertical caps can't both run through uncut. For the most rigid door, I always span the shortest distance with the uncut cap. (On the Display Cabinet, that's the horizontal divider.) Then piece in the caps running in the other (vertical) direction.

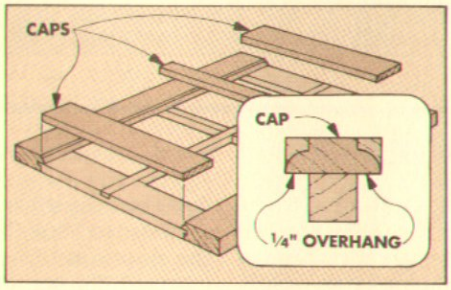

9 *Rip caps to width allowing 1/4" overhang on each edge (inside edge only for rail caps). The overhang forms a rabbet that holds the glass or wood panel in place.*

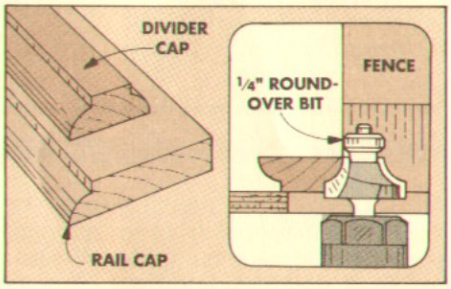

10 *With height of router bit set the same as when routing the stiles, rout the profile on both edges of the divider caps and inside edge of each rail cap.*

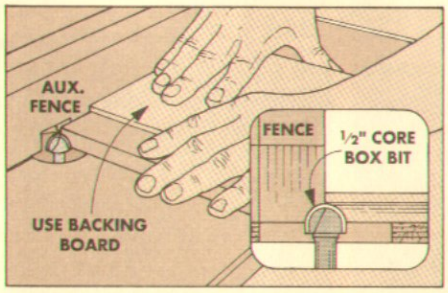

11 *Rout ends of all cap pieces with 1/2" core box bit to match round-overs on mating pieces. Make trial cuts to determine height of bit and depth of cut.*

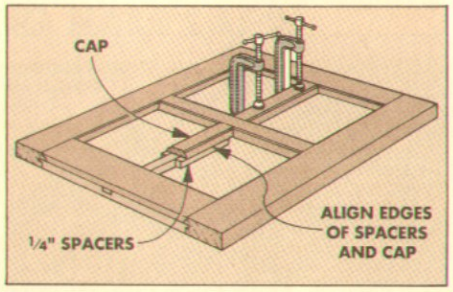

12 *Position cap pieces on bottom grid, using a 1/4" spacer as a gauge. Align edge of spacer with edge of cap. Then glue and clamp in place.*

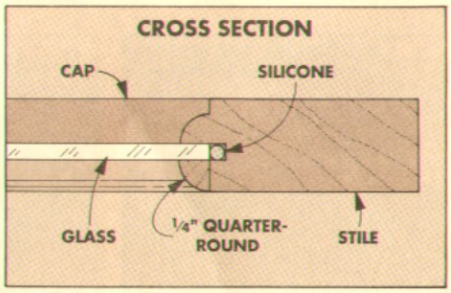

13 *Apply a few spots of silicone in grooves. The cured silicone will keep glass from moving sideways. Insert glass and secure with 1/4" quarter-round.*

Shop Notes

CUTTING DENTIL MOLDING

■ If you use an indexing system like a box joint jig to cut the dentil molding on the Display Cabinet, you can run into a problem. If the jig isn't set up *perfectly*, there can be a slight gain (or loss) between each cut that can add up. It doesn't take much error (as little as 1/128") in the distance between cuts to be noticeable by the time you get to the end of a long workpiece.

If there's a gain or loss, the last dentil block won't be the same size as the rest, and you'll be able to see the difference, see Fig. 1.

MEASURE AND MARK. The best way I've found to get dentil blocks that all look the same on a long workpiece is to lay out the position of the dadoes with a pencil instead of using a jig. (For the Display Cabinet, the 1/4" dadoes are 3/4" apart.)

When you cut to a mark, it's important that the marks for the dadoes are laid out accurately. So, use a tape measure that's as least as long as the workpiece, and don't move the tape as you're marking. Otherwise, you're going to be back with the "gain" problem again.

COMPENSATING. What if you cut a molding strip that fits your cabinet, but it's not the same length as called for in the plans? Won't each of the blocks be different than specified in the plans? Yes, but there's a trick you can use to get all the dentil blocks to *appear* very close to the same size.

After you've measured and marked, you'll know whether the last cut is going to produce a dentil block the same size as the first. If it doesn't work out exactly, you can "cheat" slightly on the layout to compensate for the difference.

Say your dentil molding strip has to be cut 1/8" longer to fit the cabinet. It's not practical to divide the extra 1/8" among *all* the blocks to get them the exact same size. It works just as well to make up the difference on just *some* of the blocks.

For example, to compensate for a molding strip that's 1/8" too long, start cheating 1/64" on the last eight marks, refer to Fig. 2. This way, each of the last eight blocks will be 1/64" too large, but this shouldn't be noticeable.

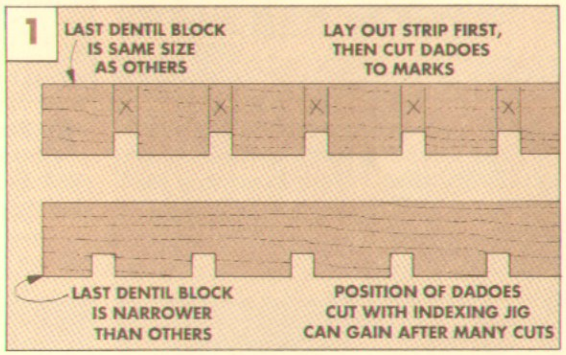

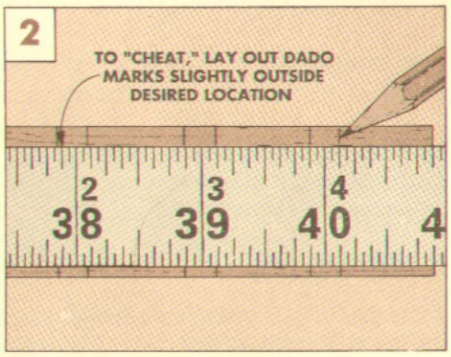

INSTALLING INSET HINGES

■ Inset hinges, like the ones used on the Display Cabinet on page 6, can be more frustrating to install than ordinary butt hinges. Since both leaves of the hinge are inside the cabinet when the door is closed, the screw holes in the hinges are tough to reach.

HINGE TO CABINET. To get around the problem, I used clamps as temporary screws to hold the hinges to the doors *before* the glass was installed.

To do this, first screw all the hinges to the cabinet frame, see Fig. 1. Now put the doors in the door opening centered up and down and also left to right.

CLAMP TO DOOR. Then, to hold the doors in this position, I clamped the free leaf of each hinge to the door stile through the window opening, see Fig. 2. This way, the clamps hold the door in place.

HINGE TO DOOR. With a clamp on each hinge, you can now open the doors and drill the pilot holes for the screws, see Fig. 3. (I used a Vix bit, see page 31.) Then, screw in the screws and remove the clamps to check each door. Now the screws can be removed and then reinstalled after the glass is in place.

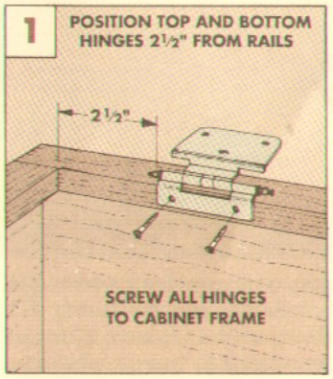

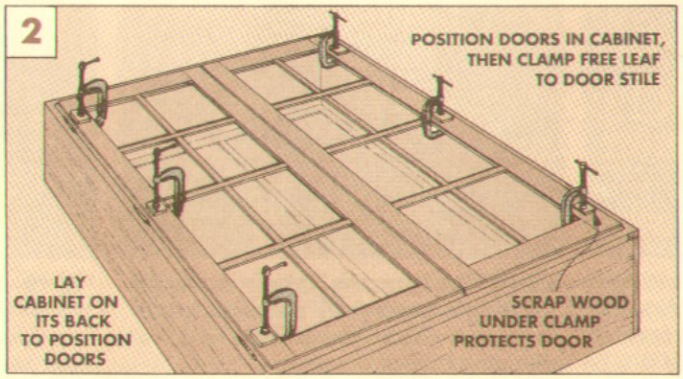

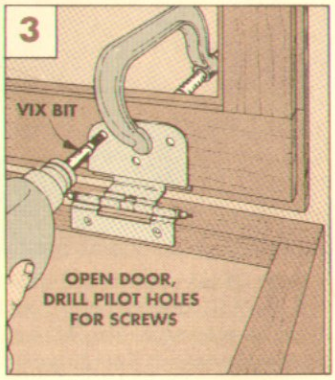

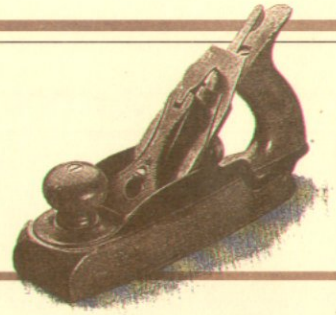

POSITIONING CABINET SHELVES

■ When there are windows on a cabinet with shelves inside (like the Display Cabinet) I think it looks best if the shelves are hidden behind the window dividers. If the shelves are much higher or lower than the window dividers, the effect of too many horizontal lines can look "busy."

STORY STICK. To get the shelves positioned properly I borrowed a technique used by cabinet installers. The technique involves marking the position of the shelf support pins on a separate marking gauge called a story stick. Then, when holes are drilled in the stick, the gauge will act as a guide when drilling the holes for the shelf supports.

To make a story stick, first rip a piece of scrap wood to a width of 2". Then cut this stick to length so it fits tightly up and down inside the cabinet. To keep everything straight, I labeled one end "TOP."

To get the holes on the story stick in just the right place, first temporarily clamp the stick to the door, see Fig. 1. Make sure the stick is straight up and down, and turn it so a narrow edge faces the front.

MARK DIVIDER EDGES. Then, use a try square to make two pencil marks on the story stick that correspond to the bottom and top edge of each window divider, see Fig. 1.

MARK SHELF EDGES. Now, remove the stick from the cabinet and lay out the position of the shelves on the stick, see Fig. 2.

MARK PIN LOCATIONS. The final thing to lay out on the story stick is the location of the holes for the shelf support pins. On the Display Cabinet, I used spoon-shaped pins, see Fig. 2a. (For different pins, adjust the position of the holes accordingly.)

By centering the hole on the width of the story stick, the hole will be the same distance from the edge when marking the front and back of the cabinet.

USING THE STICK. After holes are drilled through the story stick for all three shelves, the stick can be used as a guide for drilling the shelf support holes.

The only secret to using the story stick is to keep the front edge of the stick flush to the inside edge of the cabinet when drilling the holes for the front pins. Then butt the opposite edge of the stick to the back of the cabinet when you drill the holes for the rear pins, see Fig. 3.

Note: To keep the shelves on the Display Cabinet from sagging, I also put a pin for each shelf in the vertical divider in the back of the cabinet.

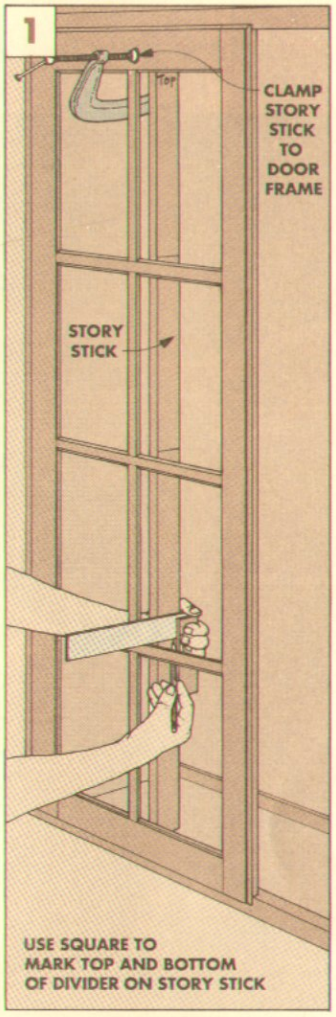

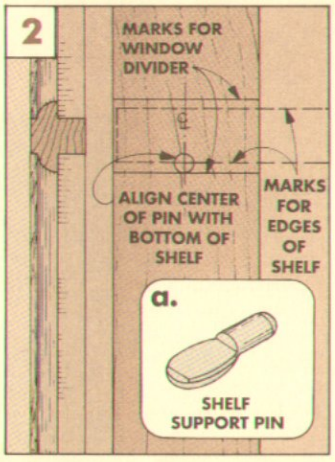

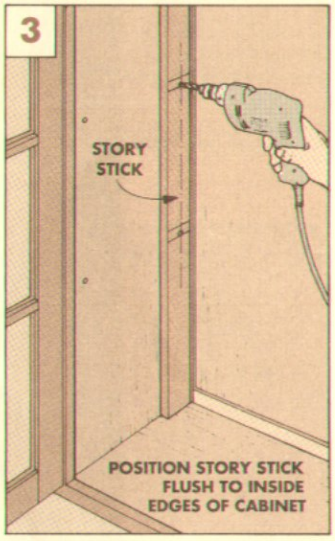

SEQUENCE FOR CUTTING HALF LAPS

■ I ran into a common problem working on the vertical dividers for the doors of the Display Cabinet — cutting long half laps on the ends of a thin workpiece.

When making such a cut, the end of a thin workpiece can flex up and down. This movement can make the half lap thinner at the end than at the shoulder.

The solution is to cut the lap in a sequence that prevents the workpiece from flexing. (I also follow this same sequence when cutting tenons.)

The first cut I make is the shoulder cut, using the fence as a stop block, see Fig. 1. (Since this isn't a through-cut, there's no danger of kickback using the fence and miter gauge together.)

The next cut I make is at the end of the workpiece. Then I clean out the waste in between with successive cuts back toward the shoulder, see Fig. 2.

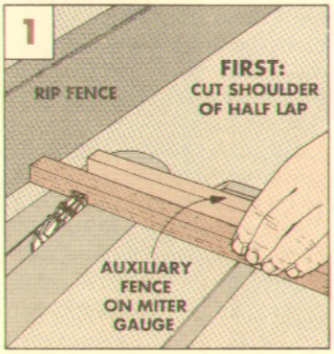

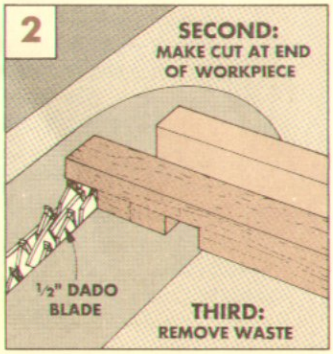

Sewing Box

This Sewing Box is really three separate boxes, all made the same way. Wooden arms connect the trays to the main case and, when you pivot open the trays, there's room inside the case for longer materials.

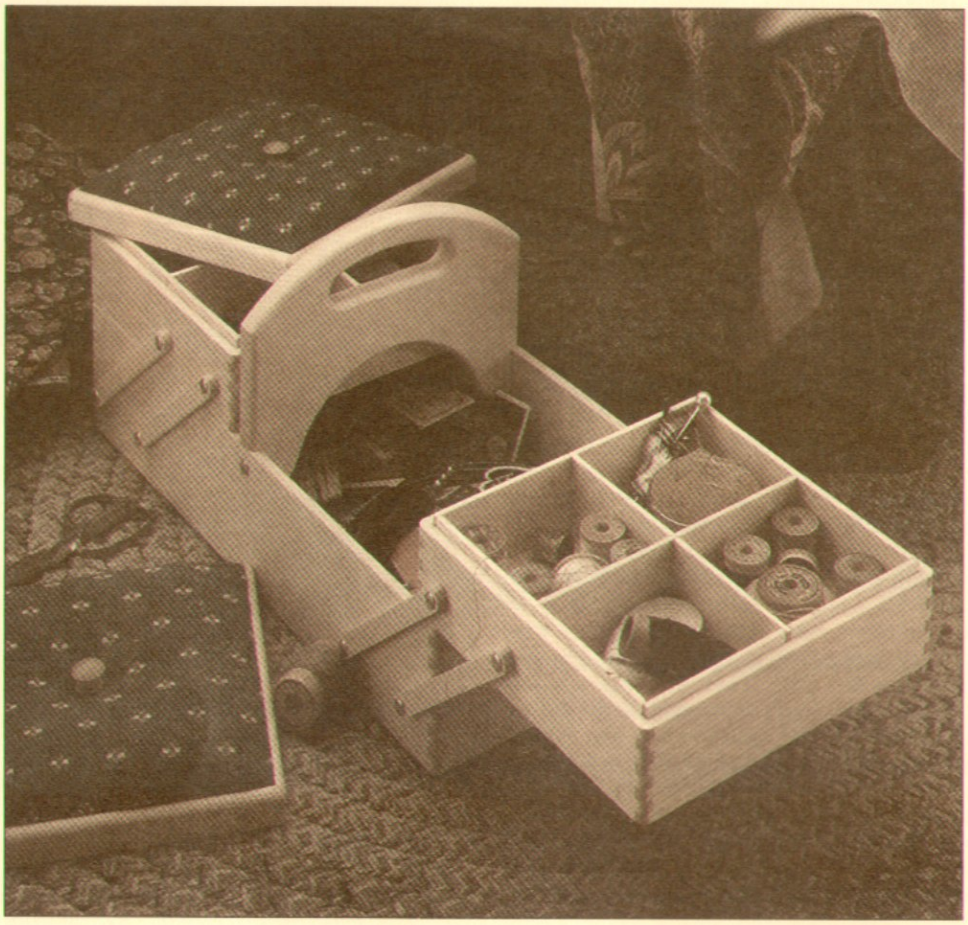

The biggest challenge I had in designing this Sewing Box didn't have anything to do with making the boxes. The challenge involved designing it so the top trays pivot open and sit flat on the lower box without all the contents spilling out.

The pivot arms used for attaching the trays aren't unique — it's the same system you see on tackle boxes with an inside tray. But to get them to work right involves two things: cutting the pivot arms so they're identical, and mounting them all in the correct locations on the box.

LID TREATMENTS. We're showing two different ways to complete the lids that cover the trays. A fabric-covered lid is what you'd find on a traditional sewing or knitting box. But, for a box used to hold other craft supplies, you may prefer the look of a contrasting plywood top.

WOOD AND HARDWARE. Except for the plywood lid and bottom panels, I built the entire sewing box from clear white pine.

To act as shafts for the pivot arms, I used brass rivets instead of screws — screws can work loose after a while. Then, to match the rivets, I screwed the carrying handle to the main case with roundhead brass woodscrews and filed the screw heads flat.

Woodsmith Project Supplies is offering a kit of hardware for the Sewing Box that includes the rivets, brass woodscrews, and birch knobs.

EXPLODED VIEW

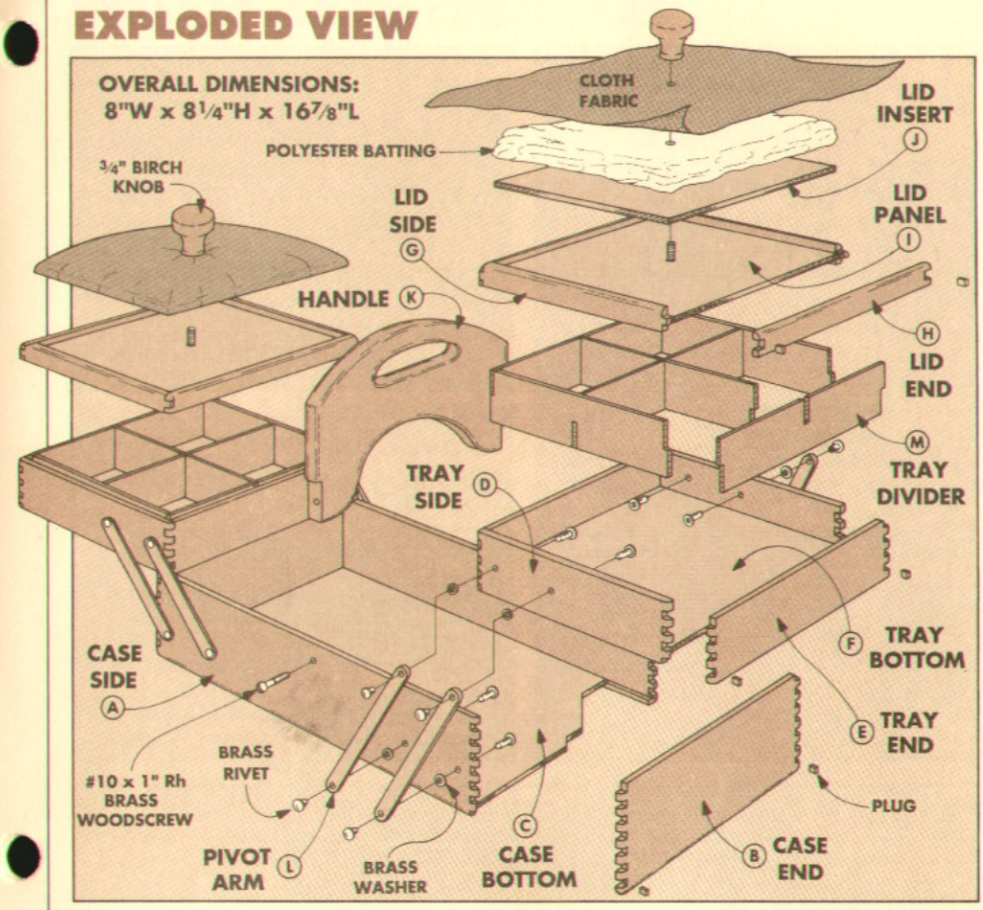

SIDE DETAIL

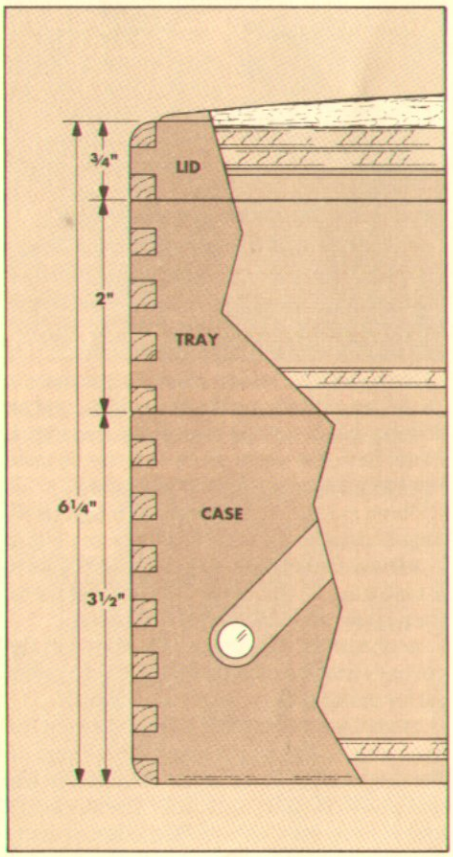

CUTTING DIAGRAM

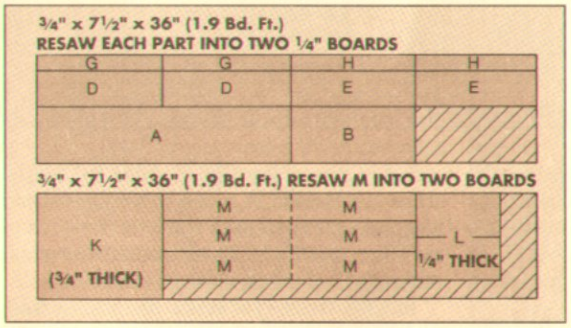

PLYWOOD

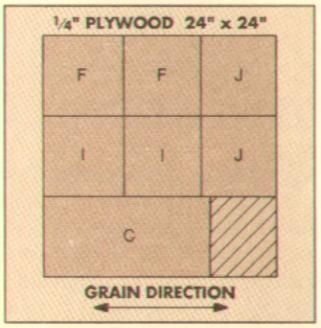

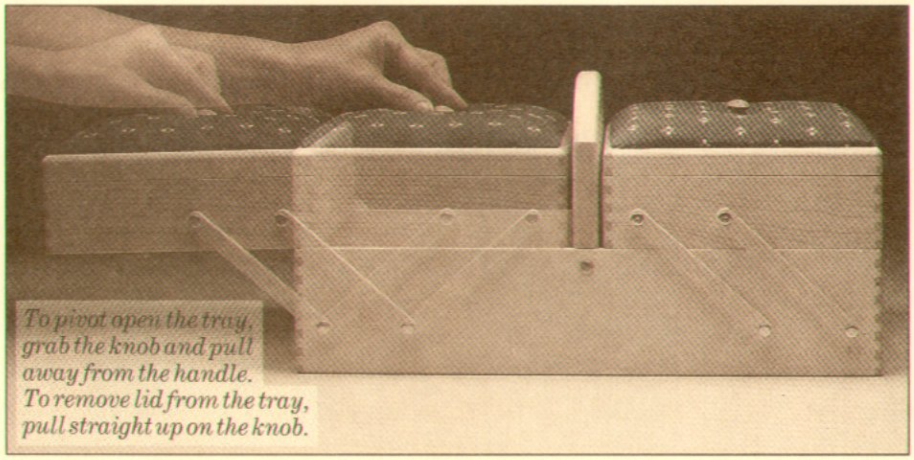

To pivot open the tray, grab the knob and pull away from the handle. To remove lid from the tray, pull straight up on the knob.

MATERIALS

WOOD PARTS

CASE

A	Case Sides (2)	¼ x 3½ x 16⅞
B	Case Ends (2)	¼ x 3½ x 8
C	Case Bottom (1)	7¾ x 16⅝ – ¼ Ply

TRAY

D	Tray Sides (4)	¼ x 2 x 8
E	Tray Ends (4)	¼ x 2 x 8
F	Tray Bottom (2)	7¾ x 7¾ – ¼ Ply

LID

G	Lid Sides (4)	¼ x ¾ x 8
H	Lid Ends (4)	¼ x ¾ x 8
I	Lid Panel (2)	7¾ x 7¾ – ¼ Ply
J	Lid Insert (2)	7½ x 7½ – ¼ Ply

OTHER WOOD PARTS

K	Handle (1)	¾ x 6¼ x 8
L	Pivot Arms (8)	¼ x ½ x 5¼
M	Tray Dividers (12)	⅛ x 1¾ x 7½

SUPPLIES

- (2) ¾"-Dia. Birch Knobs & Screws
- (16) ½" Extra-Long Brass Rivets
- (16) #6 Flat Brass Washers
- (2) #10 x 1" Rh Brass Woodscrews
- 10" x 20" Cloth Fabric (optional)
- 10" x 20" Polyester Batting (optional)
- General Finishes' Two-Step Sealacell

CASE/TRAY/LIDS

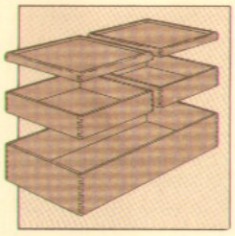

This Sewing Box is really three boxes—two square boxes (with lids) on top, and a longer box below. All three boxes are made from ¾" pine resawn to ¼" thick.

BOX BLANKS. To begin, first rip a 3-foot-long 1x8 to produce two blanks — one 3¾" and one 3½" rough widths. (These pieces will be trimmed to finished widths of 3½" and 3¼" after the box joints are cut.)

Now cut the wider piece to produce a 16⅞"-long blank for the case sides, and an 8"-long blank for the case ends, see Fig. 4. Note: Save the waste piece — it can be used later as a test piece for the box joints.

Next, cut the narrower piece into four 8"-long blanks for the tray/lid boxes, see Fig. 4.

RESAW AND PLANE. To get all the blanks to a uniform ¼" thickness, first resaw them, then plane them all to final thickness.

BOX JOINTS. The pieces are joined at the corners with box joints. To build a box joint jig for making these joints, see page 24.

TRIM CASE TO WIDTH. After you've cut the box joints, the pieces can be ripped to finished width. To make the **case sides (A)** and **ends (B)** start with the 3¾"-wide pieces and rip the waste off the top edge, leaving fourteen full pins and slots, see Fig. 2.

Next, to produce four **tray/lid sides (D** and **G)** and four **tray/lid ends (E** and **H)**, rip the waste off the 3½"-wide pieces. This will leave a total of thirteen full pins and slots on each piece, see Fig. 1.

GROOVES. Each of the three boxes has a ¼" bottom panel that's glued into a groove near the bottom. The 8"-square boxes have an additional panel for a groove near the top.

I used the table saw with a rip fence and cut all the grooves in two passes, see Fig. 3. Line up the first cut with the edge of the last pin (or slot), see Fig. 3. Then move the fence over slightly and make a second pass (on the test piece first) to enlarge the groove so it accepts the plywood. Note: The tray/lid pieces are grooved near *both* edges, see Fig. 4.

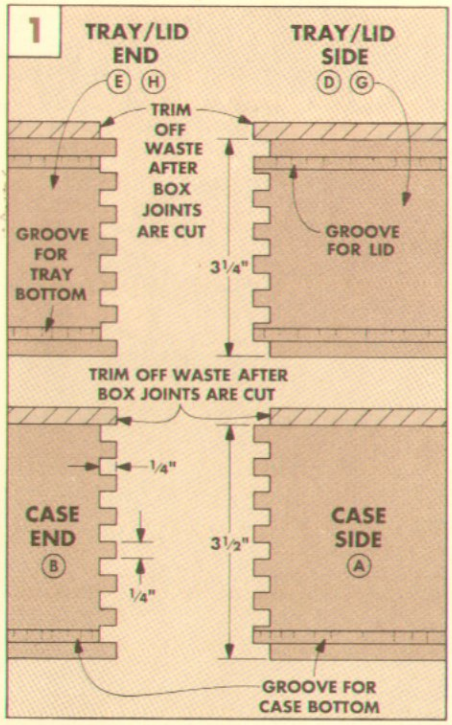

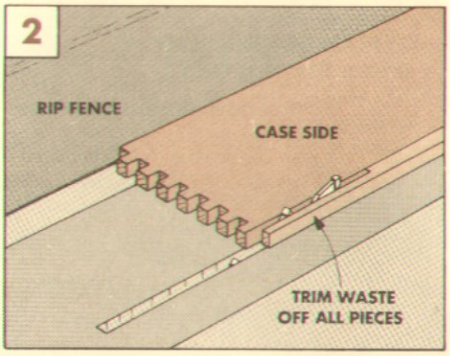

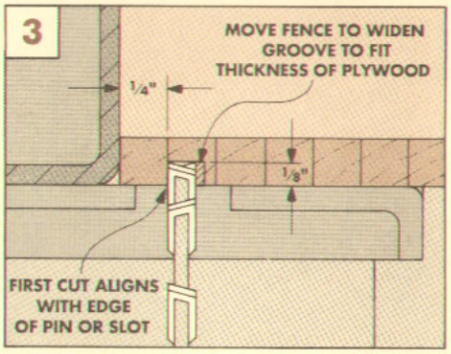

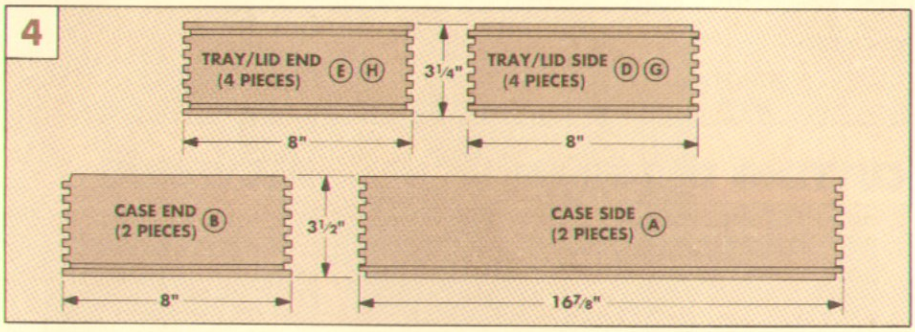

PLYWOOD. To determine the size of the plywood bottoms and lid panels, first dry assemble all three boxes. Then, cut the plywood **bottoms (C, F)** and **lid panels (I)** so each piece is 1/16" *less* than the distance from the bottoms of opposite grooves.

ASSEMBLY. To assemble the boxes, put glue on the box joints and in the grooves. Then clamp the box square with the plywood in place, see Fig. 5. After the boxes were assembled, I glued a wedge-shaped plug into the two small voids on the ends of each box, see Fig. 6. Then I sanded the plugs and pins flush on all sides of each box

ROUND OVER. To make the boxes look more finished, round over all corners of each box, the *top* edges of each tray/lid assembly, and the bottom of the case, see Figs. 7 and 8.

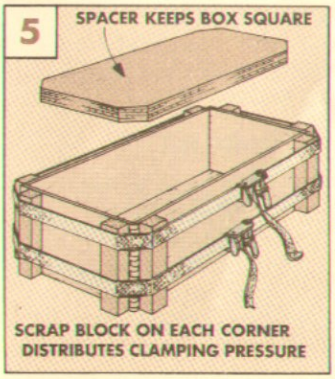

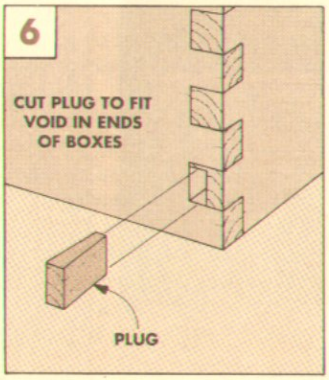

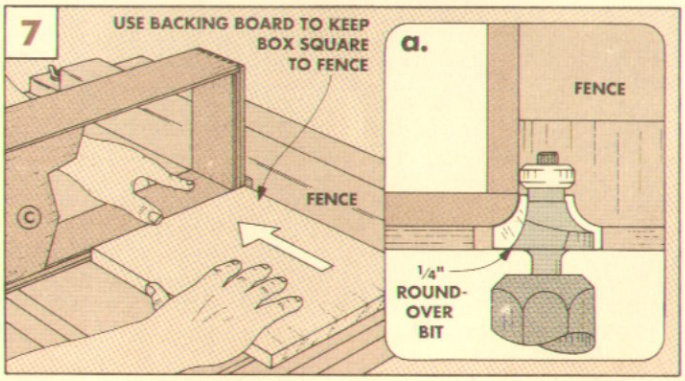

SEPARATING LID FROM TRAY

Once the three main boxes are built, the two 8"-square boxes can be cut apart. This will produce two trays with plywood bottom panels, and two lids with plywood top panels.

I cut the lids from the trays on the table saw and used the rip fence as a guide, see photo at right. It looks like a straightforward operation, but there's a trick to keep the lid from pinching the blade on the final two cuts.

CUT LID FROM TRAY. To cut away the lid, first set the blade height to 5/16" and adjust the rip fence so the outside of the blade lines up with the second slot from the top edge of the box, see Fig. 8. This will produce a lid that has a total of three full pins and slots (in my case, 3/4" high).

With the fence and blade adjusted properly, begin cutting the lid from the first tray, see Fig. 8. But don't cut the lid completely off — first, cut through two *opposite* sides, then stop. Here's where the trick comes in.

To keep the lid from pinching the blade, I slid a piece of 1/8" Masonite through the box from one kerf to the other, see photo. Then I put tape above and below it to hold the strip in position. Now make the last two passes to separate the lid from the tray. Continue with the second box in the same manner.

TRIM TRAY TO DEPTH. Now set the two lids aside and trim the trays to final depth, see Fig. 9. For this operation, adjust the fence to produce a tray with a total of eight full slots and pins, see Fig. 9a. Trim both trays to this final height (in my case, 2" tall).

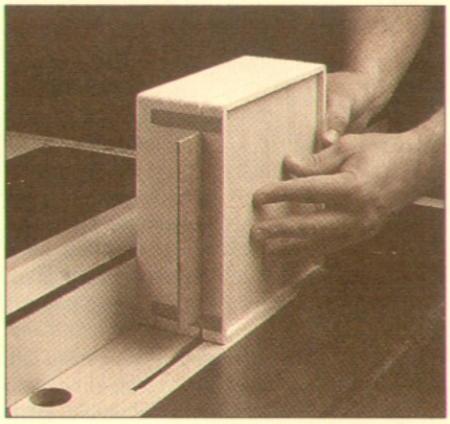

To keep the lid from pinching the saw blade as it's cut from the tray, slide a wide strip of Masonite through the first two saw kerfs.

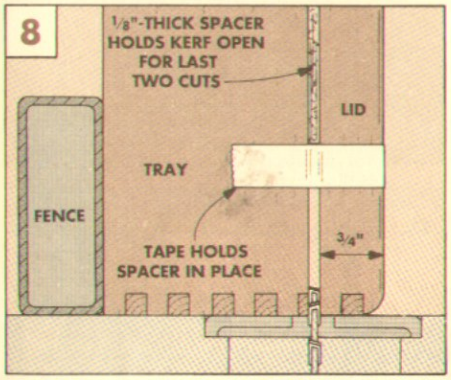

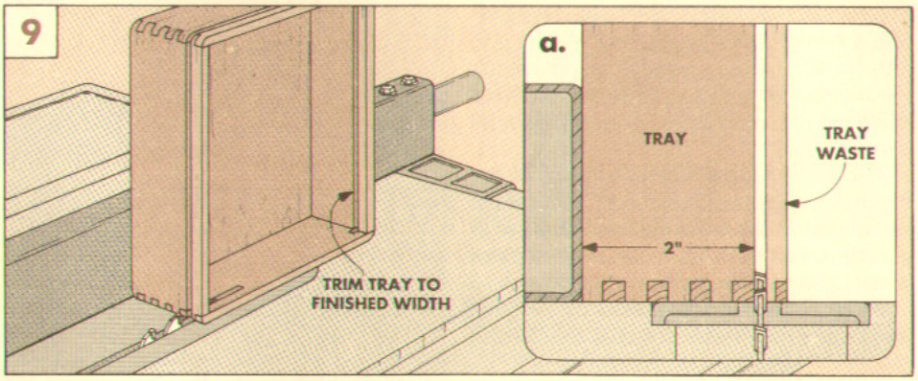

HANDLE

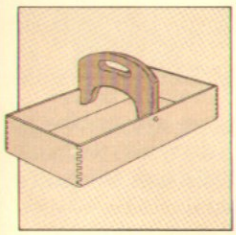

The sewing box has a carrying handle that separates the two trays. To make the **handle (K)**, first cut a blank to width and length, see Fig. 10. Then lay out the arcs on the top and bottom of the handle and the finger opening. Also mark the location of the 3/4" holes that define the ends of the finger opening.

CUT NOTCHES. Before cutting the arcs, cut a notch on each side of the blank to allow clearance for the handle to slide into the case, refer to Fig. 13. I cut these 1/4"-wide notches using the miter gauge on the table saw, see Fig. 11.

SAW TO SHAPE. Now cut the arcs on the top and bottom of the handle. Then bore the holes at the ends of the finger slot, and complete the slot with a sabre saw. Next, to make the handle comfortable, I routed a 1/4" round-over on the curved edges, see Fig. 12.

INSTALL HANDLE. To install the handle, first drill a shank hole centered on the length of the case. Then line up a centerline drawn on the handle to the centerline on the case, see Fig. 13. Now drill a pilot hole into the handle, and screw the handle to the case.

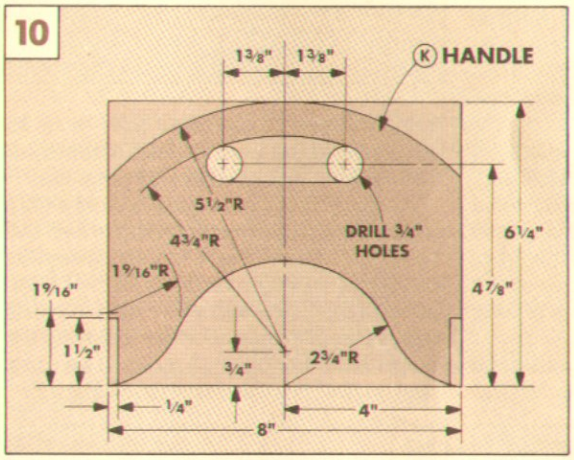

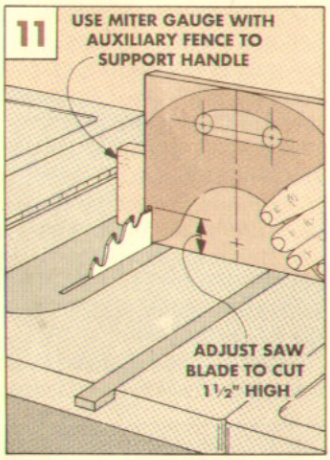

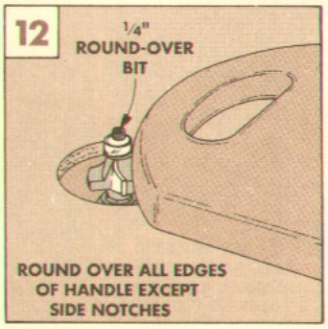

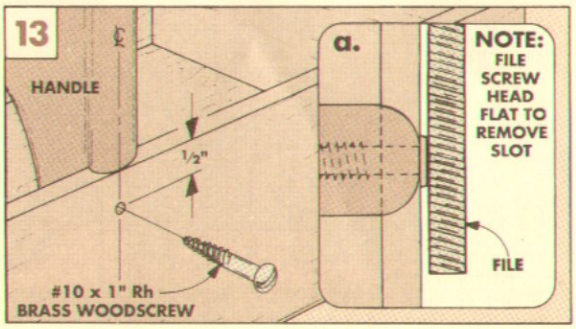

PIVOT ARMS

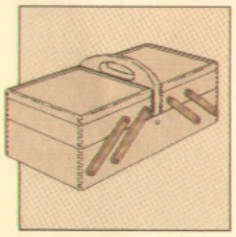

When you're done making the sewing box case, trays, and lids, the trays can be attached to the case. But the trays aren't mounted with the usual metal hinges. Instead, they pivot away from the case on short wooden arms and brass rivets.

PIVOT ARM BLANK. I started making the pivot arms by first cutting over-size blanks to length and width. This way, when the arms are sliced from the blanks, they'll all be the same size.

To make blanks for the **pivot arms (L)**, first cut two pieces of ½"-thick material to finished dimensions of 2½" wide and 5¼" long. Then, before cutting the blanks into individual sections, rout a ¼" round-over on the two ends of each blank, see Fig. 15. (Note the grain direction as you prepare to round over the ends.)

SLICE OFF ARMS. When the ends of the blanks have been rounded over, you can rip the blanks to form the eight pivot arms. (I also ripped an extra one to use as a test piece when laying out the holes for the rivets.)

Safety Note: Use a push block on the table saw to slice the ¼"-thick pivot arms from the blank, see Fig. 16.

RIVET HOLES. One of the keys to smooth operation of the pivoting trays is having identical size pivot arms. But that's not all. When the arms are riveted to the case, the distance between the rivet holes has to be the same for each of the arms. So I drilled the rivet holes using a fence and stop block clamped to the drill press, see Fig. 17.

To do this, first lay out the position of each hole on the test piece, see Fig. 14. Then, when the fence and stop block are locked in the correct place on the table, drill a hole in one end of the test piece. To drill the other hole, just flip the piece over. Note: Keep the same edge against the fence as when drilling the first hole.

LAYOUT GAUGE. Before you can attach the arms, holes have to be drilled in the case and tray for rivets. These holes have to be located as accurately as the holes in the arms. So I used a simple gauge to lay them out.

To make the layout gauge, start with a piece of scrap wood cut to a width of 5½" and a length of 8", see Fig. 18. Now lay out the location of the four rivet holes on the gauge, and drill the holes with a 1/16" bit in the drill press. Then, to make it easier to line up the gauge to the workpiece, I screwed a narrow cleat on the end of the gauge, see Fig. 19.

To use the gauge, place it against the side of the sewing box (with the tray in position) and poke the drill bit through the gauge holes to leave a mark that shows the location of the 9/64" holes for the rivets, see Fig. 19.

INSTALL ARMS WITH RIVETS. When all the holes have been drilled for the rivets, the arms can be attached to the box. (It's easiest to do this with the case lying on its side.) Then the caps of the rivets can be set with a sharp hammer blow from inside the case.

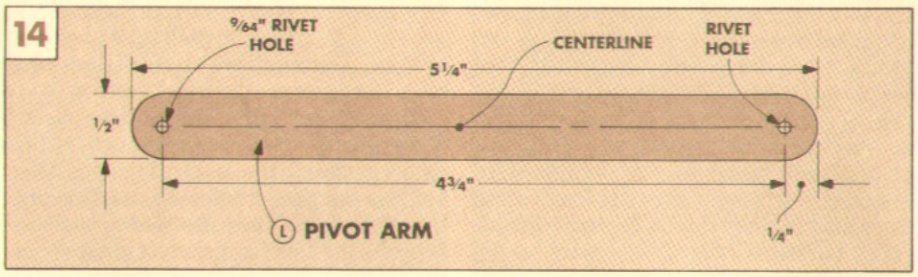

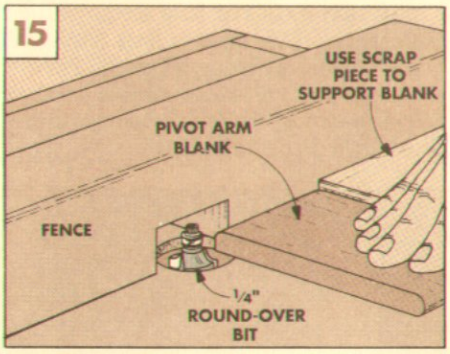

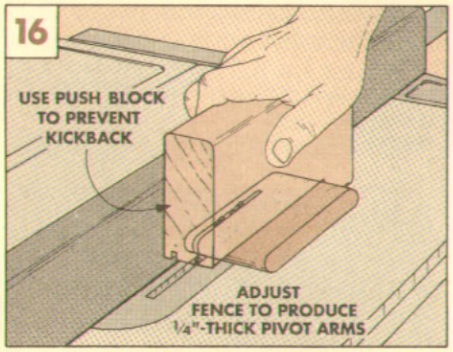

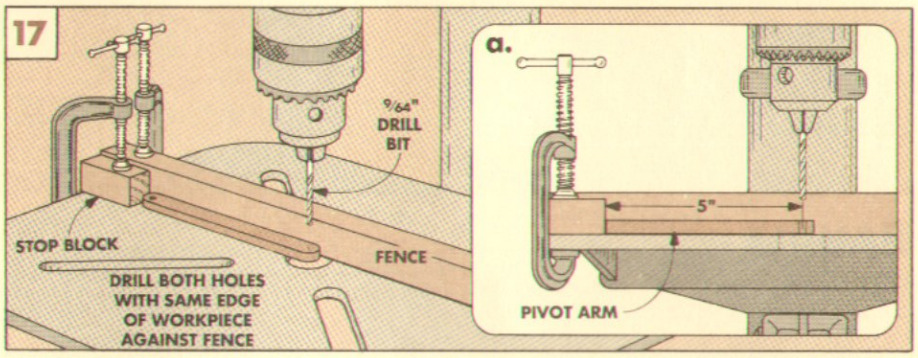

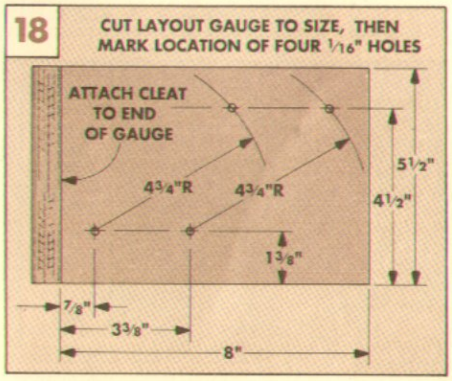

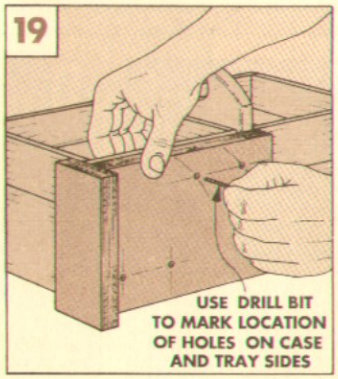

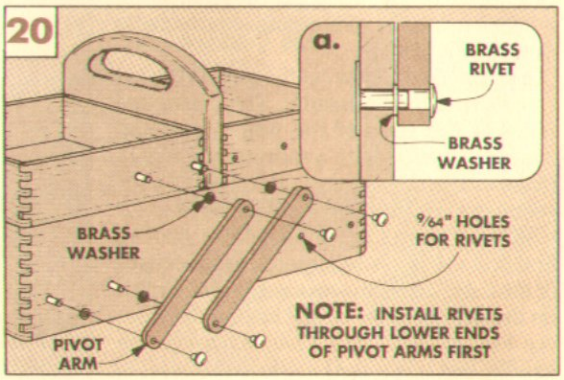

TRAY DIVIDERS

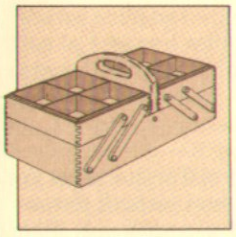

I made compartments in each tray using thin dividers. The interlocking dividers also form a lip around the tray to hold the lid in place.

CUT TO SIZE. To make the **tray dividers (M)**, cut three pieces of ¾" pine to rough dimensions of 2" wide by 16" long. Then resaw and plane the pieces to produce six ⅛"-thick blanks.

The six blanks can now be cut into twelve pieces that fit inside the trays, see Fig. 21. Rip the pieces to width so when they're placed inside the tray they stand ¼" above the sides, see Fig. 23. (In my case, the dividers are about 1¾" wide.)

NOTCHES. The tray dividers fit together by means of interlocking notches, see Figs. 21 and 22. Each of the notches are the same size, so I used the table saw to cut them with just two setups. The first setup is for cutting the notches on the ends of the dividers. The fence is moved to cut the center notches.

I set the height of the saw blade to cut the notches ⅞" deep (half the width of the dividers). Then cut the ⅛"-wide end notches by standing the pieces on edge and running them through the saw one at a time.

To cut the center notches, position the rip fence so the cut is exactly centered on the length of the dividers, see Fig. 21. Note: The center notches are cut on the *opposite* edge as the end notches, see Fig. 22.

With the center notches cut on all the divider pieces, assemble them to create each divider unit. Then, to allow clearance for the rivet heads inside each tray, plane or sand the lower outside edge of the four divider pieces that will contact the rivets.

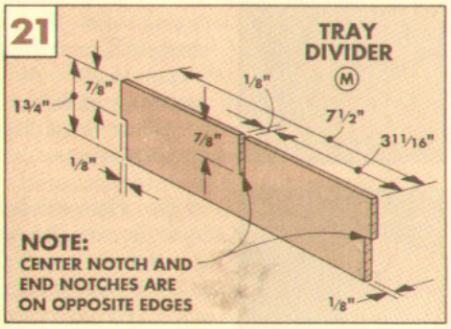

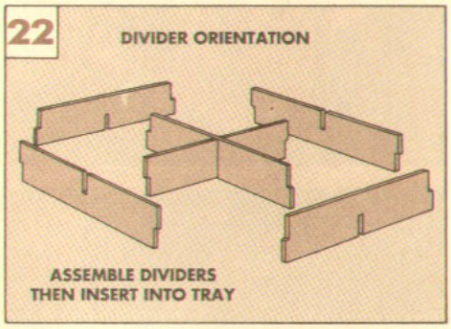

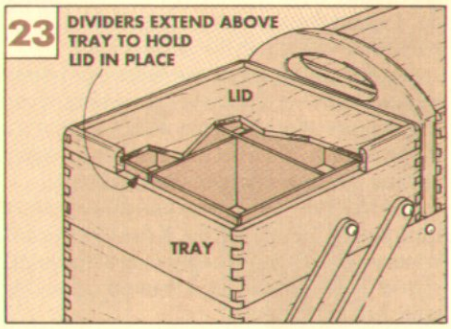

FABRIC LID

A shallow recess on the top of each lid will accept an insert that's covered with fabric, or an uncovered plywood insert, see box at right. Either way, there's a wood knob screwed to the lid so you can lift it from the tray.

INSERT & KNOB. To make the fabric lid, first cut a **lid insert (J)** from plywood to fit inside the ¼" recess in the top of each lid, see Fig. 24.

Now turn the insert upside down and make a mark in the center for a screw to attach the knob. Then drill a ⅛" countersunk shank hole at the mark.

ATTACH FABRIC. To complete the lids, first cut two pieces of fabric 10" square, see Fig. 24. Then cut a piece of backing material (I used polyester batting) to fit each plywood insert.

To attach the fabric, center the backing material on the fabric and place the lid insert on top of the backing material. Now fold the fabric over the plywood and staple it in place, see Fig. 24a.

ATTACH KNOB. Next, put the fabric-covered insert in the lid recess and push the knob screw up through the lid panel. Then thread the knob onto the screw.

PLYWOOD LID

For someone with different storage interests, a plywood lid may be more appropriate than a fabric-covered lid. A plywood lid is made the same as a fabric-covered lid — except the plywood has to be shimmed (because there isn't any fabric).

SHIMS. An uncovered plywood insert has to be shimmed so it fits flush with the top edge of the lid. (The recess is ¼" deep, but ¼" hardwood plywood is often *not* that thick.) So I cut four shims about 1/16" thick for each lid, see Fig. 25.

CUT INSERT TO SIZE. When the shims are cut to size, the **lid inserts (J)** can be cut to fit in the lid recess, see Fig. 25. Then the shims can be glued in place, and the inserts glued to the shims.

KNOB. To attach the lid knobs, first turn the lid upside down and make a mark in the center of the lid panel (I). Then drill a ⅛" countersunk shank hole through the lid at this mark.

Finally, thread the knob onto a #10 x 1" flathead machine screw from the top side of the lid, see Cross Section in Fig. 25.

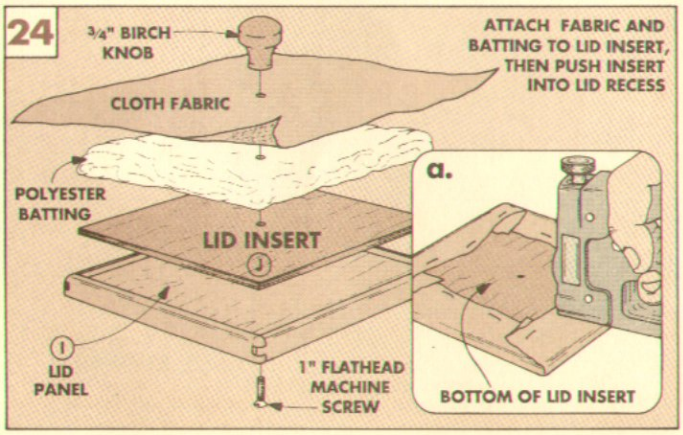

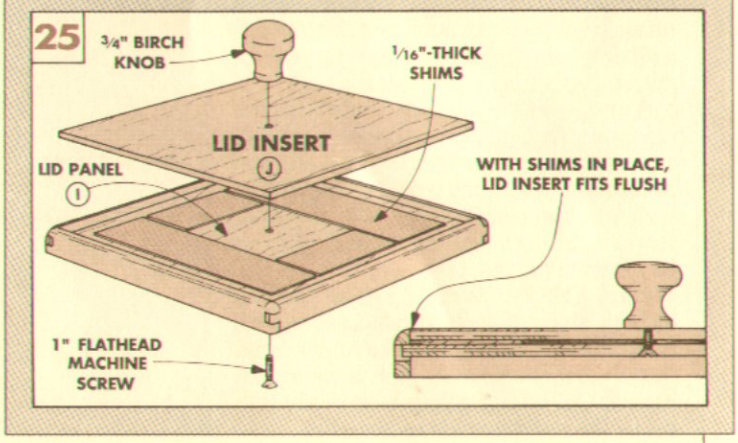

Box Joint Jig

I've seen a lot of different box joint jigs over the years. So, when I began to build the Sewing Box for this issue, I decided it was time to design a box joint jig with the features I've been looking for.

INDEX PIN. Almost every box joint jig I've seen uses an index pin to keep an equal space between the slots in the box joint. But it's usually a pin that's fixed in place on the jig. I wanted a jig with an adjustable pin so you can sneak up on the perfect joint.

Another thing about the index pin I think is important — it should be removable. If you can replace the index pin with one that's a different size, it's a lot more accurate when cutting larger or smaller slots and pins.

CLEAN CUTS. There was one other feature I wanted on a box joint jig. If the jig cuts box joints *accurately*, it should also cut the joints *cleanly*. So, for this jig, I wanted a backing plate behind the cut.

After building several prototypes, I finally came up with a jig that's adjustable, works for different-size joints, and makes nice, clean cuts. Plus, it can be built to fit either a table saw or a router table.

MATERIAL. I made the jig with hardwood and Masonite parts, see Exploded View. The front and back fences are maple (to give the jig stability), and so is the index pin (to minimize wear). The table runner can be made from either hardwood or phenolic plastic and cut to fit your miter gauge slot. (For sources of the hardware needed to make the box joint jig, see page 31.)

HOW THE JIG WORKS

To set up for a perfect fit between mating workpieces, there are slots in the back fence. This lets you adjust the distance between the index pin and the router bit (or saw blade).

INTERCHANGEABLE PIN. The index pin is mounted on a carrier plate that can be taken off and replaced with another plate that has a different-size index pin. This way, you can cut joints of variable size.

BACKING PLATE. Finally, there's the replaceable backing plate to prevent chipout, see Exploded View. This is just a piece of Masonite that's beveled on two edges so it slides in a dovetailed recess in the front fence. If one plate gets too chewed up, it can be replaced with another.

USES. This box joint jig can be used on either a table saw or router table, see photos. Shop Note: To use this jig on a router table, the top of the table must have a slot for the runner. On the facing page we show how to rout a slot in a shop-built router table.

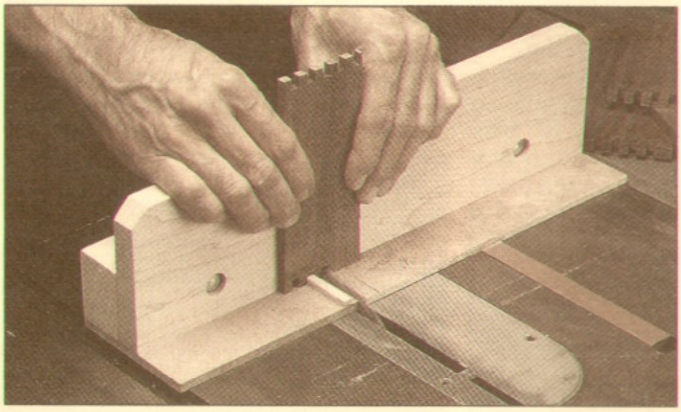

◄ *The box joint jig can be built for use on a table saw. With a dado blade, box joints can be cut quickly and accurately. And by adjusting the front fence, the jig can be fine-tuned for a perfect fit with any width dado. The table saw and dado blade are best for larger joints.*

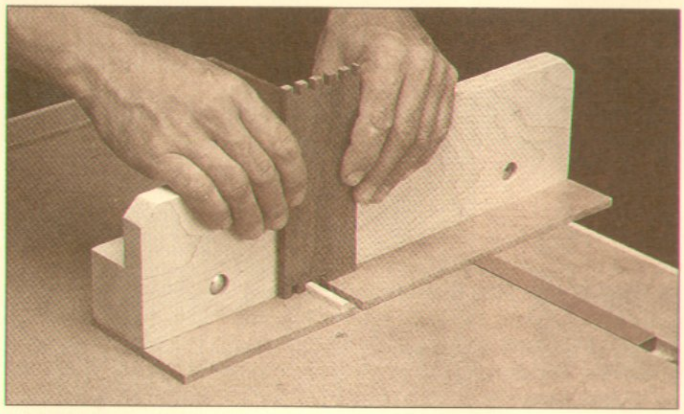

◄ *The jig can be built for cutting box joints on a router table. By mounting a straight bit in the router, you're able to cut slots with flat bottoms — especially when the slots are smaller than about ½". But for box joints larger than ½", the table saw, above, is a more efficient tool.*

EXPLODED VIEW

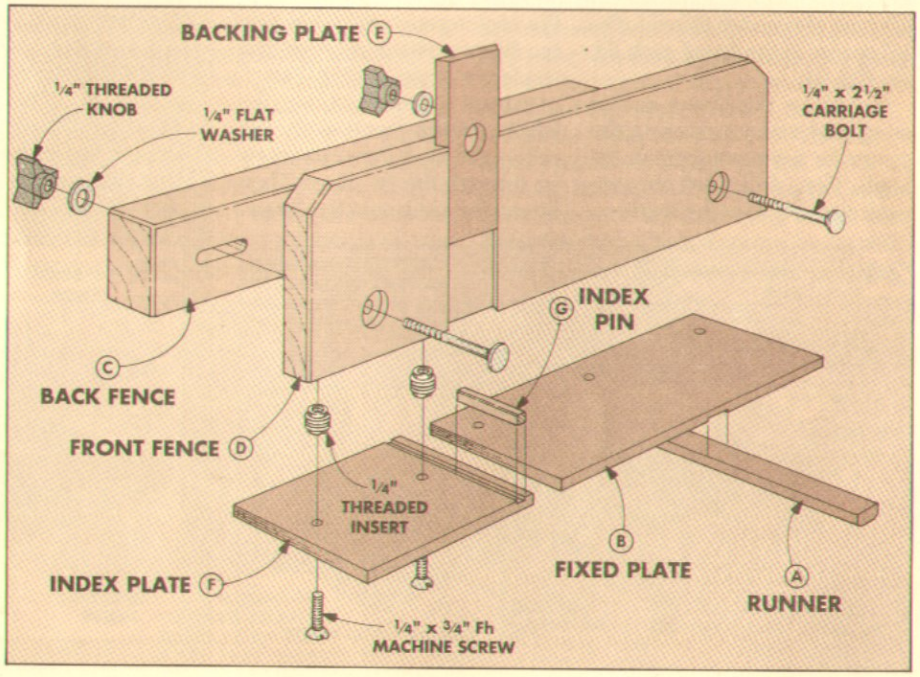

FIXED PLATE & BACK FENCE

I started building the jig from the bottom up. That is, I started with the runner. I cut the **runner (A)** from 3/8" phenolic plastic (you could use hardwood) to a length of 9", see Fig. 1. But the important thing about the runner is the width — it must fit the miter gauge slot of *your* table saw or router table.

FIXED PLATE. Once the runner is cut to width, the next step is to make the **fixed plate (B)** that the runner attaches to, see Fig. 1. Cut this from 1/4" Masonite, then cut a 1/16"-deep groove on the bottom to hold the runner securely, see Fig. 1a.

Locate the runner groove the same distance from the edge of the fixed plate (B) that the miter gauge slot is from the router bit (or saw blade), see Fig. 1.

Now the runner can be glued into the groove. I used super glue on the phenolic plastic, but use yellow woodworker's glue if you've made a hardwood runner.

Next, drill three countersunk shank holes near the back edge of the plate for attaching the plate to the fence. Locate the *middle* hole in the center of the runner.

BACK FENCE. To stiffen the jig, I made the **back fence (C)** from 1 1/2"-thick maple, see Fig. 2. After the back fence is cut to size, a slot can be bored near each end to allow the jig to be adjusted. These slots can be cut by drilling overlapping holes on the drill press, or by using a mortising table or router table.

Now screw the fixed plate to the fence with the runner 90° to the fence, see Fig. 2a.

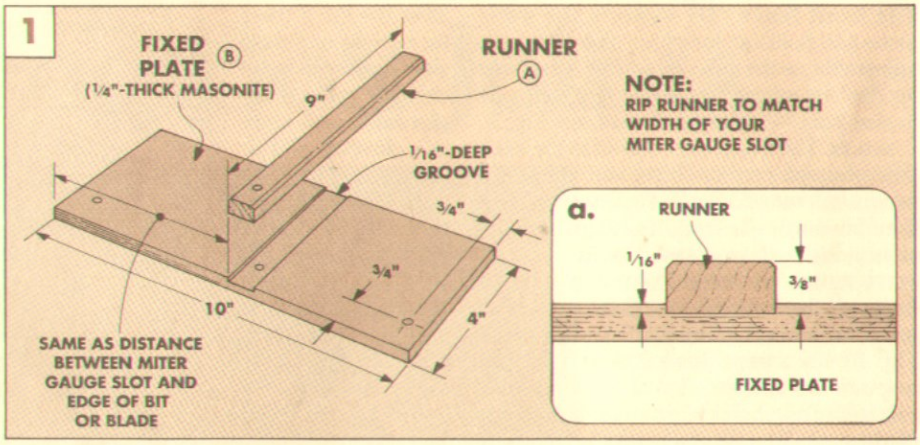

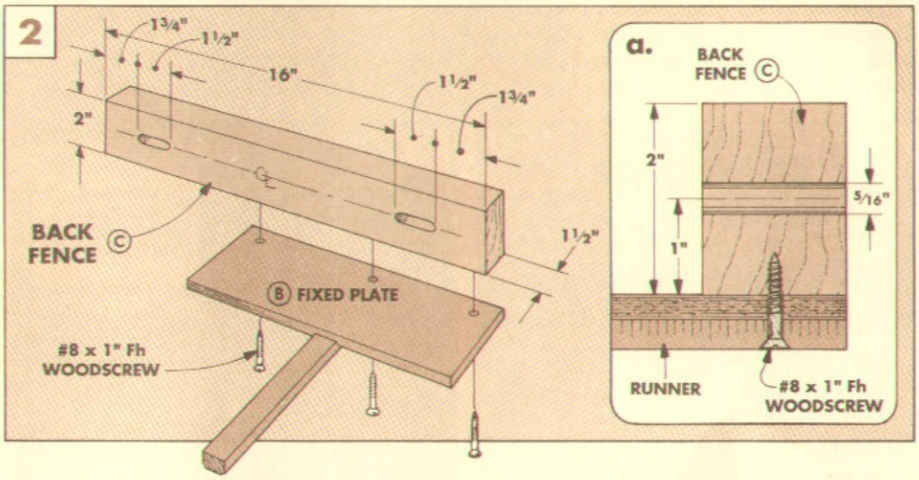

ROUTER TABLE SLOT

To use this Box Joint Jig on the router table, there has to be a miter gauge slot in the table top of your router table. So if your table doesn't have a slot, you will have to rout one. (This slot should also be cut to accept your miter gauge.)

To locate the position of the slot, I used the miter gauge from my table saw as a guide, see Fig. 3. Set the miter gauge in front of the bit hole so the gauge clears the hole and the bar of the miter gauge is parallel to the front edge of the table.

Then draw a pencil mark on the table top to indicate both edges of the slot.

To guide the router, temporarily clamp a straightedge to the top of your router table, see Fig. 4. Then, to cut the slot, I used the router with a 1/2" straight bit.

Make several passes, moving the straightedge slightly between passes to sneak up on the final width of the slot. Stop when the miter gauge bar and the runner of the Box Joint Jig just fit the slot — not too tight or too sloppy.

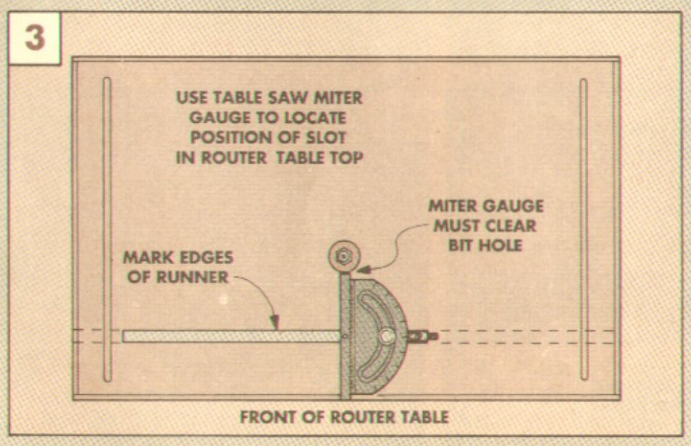

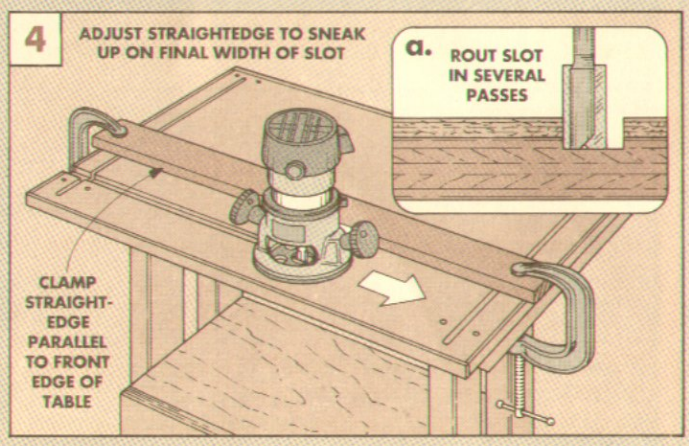

FRONT FENCE

The **front fence (D)** supports the workpiece and holds an index pin plate. And, it's adjustable, so the index pin can be fine-tuned for the best joints. Start by cutting the fence to size from ¾"-thick hardwood, see Fig. 5.

BOLTS. The front fence is held to the back fence by two carriage bolts and knobs (or wingnuts), refer to Fig. 8. Drill two counterbored holes for the bolts that align with the slots in the back fence, see Fig. 5a.

THREADED INSERTS. The index plate attaches to the bottom of the front fence with machine screws in threaded inserts, refer to Fig. 10. To accept these inserts, drill two holes in the bottom edge of the fence, see Fig. 5. Drill the holes large enough to accept the inserts without splitting the ¾" fence.

BACKING PLATE. The last thing to add to the front fence is a backing plate. This backs up the workpiece being cut and prevents chipout. But this plate can get chewed up after it's been used for cutting different-size joints. So I decided to make it replaceable and slide in a dovetail slot in the fence.

To rout the slot in the front fence, I used a dovetail bit on the router table, see Fig. 6. Then, to make the **backing plate (E)**, first tilt the table saw blade to match the angle of the dovetail bit (usually 14°). Then rip a long strip of ¼" Masonite so the plate slides in the dovetail slot, see Fig. 7.

Now cut several lengths off the strip to match the height of the fence (4"). (Save the extra backing plates for future use.) Then, to make it easier to remove the backing plates from the jig, I drilled a finger hole in each of the plates, see Fig. 7.

ASSEMBLY. Finally, the front fence can be bolted to the back fence with carriage bolts and knobs (or wingnuts), see Fig. 8.

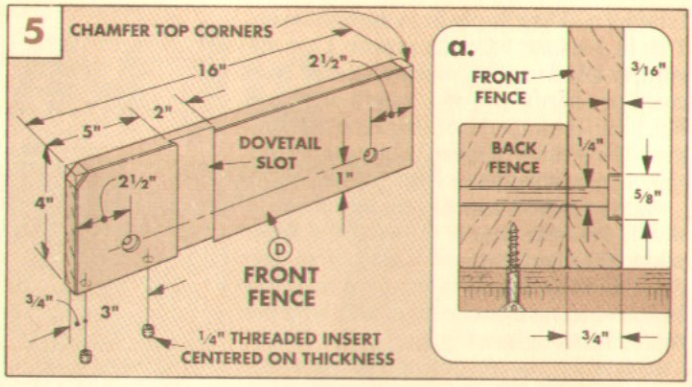

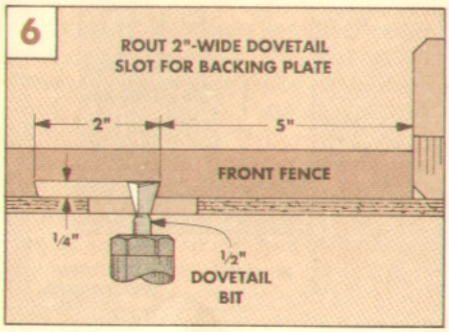

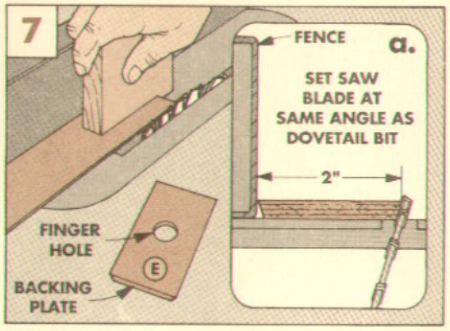

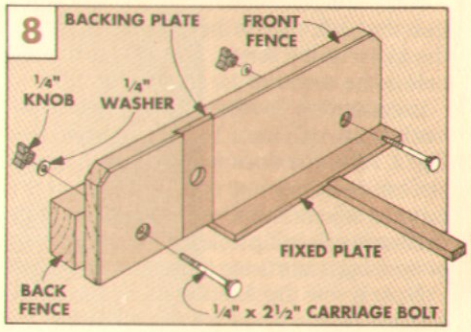

INDEX PLATE AND PIN

Probably the most unique feature of this box joint jig is the interchangeable index pin. By switching index pins you can accurately cut different size box joints.

PLATES. Each different index pin is glued in position on top of its own carrier plate, see Fig. 9. So cut a number of these **index plates (F)** from ¼" Masonite.

Next drill two countersunk holes through each plate to align with the threaded inserts in the front fence. Then, each plate can be screwed to the bottom of the fence as it's needed for cutting different-size box joints.

INDEX PIN. The next thing to decide is the width of the index pins. The index pin width should match the dado blade or router bit you plan on using to cut the slots for your box joints. Since most of the box joint slots I cut are ¼", ⅜", ½", or ¾" wide, I started by cutting an index pin to each of these widths.

Cut each **index pin (G)** 2¾" long from hardwood, see Fig. 9. Then, to make it easier for the workpiece to slide over the pin, I sanded a slight chamfer on the upper edges.

PIN GROOVE. When the index pins have been cut to finished size, a groove can be cut in each plate to accept the pin, see Fig. 9. Cut the groove 1/16" deep, and position it the same distance from the edge of the plate as the width of the index pin being attached, see Fig. 9a. Then glue the pin into the front end of the groove.

SCREW ON PLATE. The last step before using the jig is to attach the plate by screwing it into the threaded inserts in the front fence, see Fig. 10.

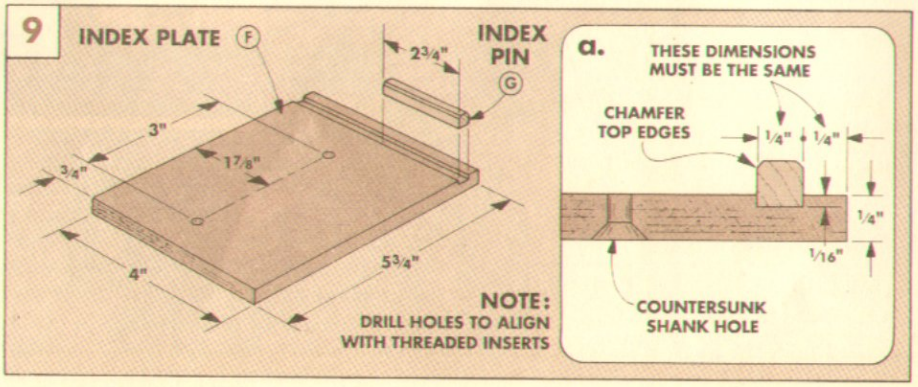

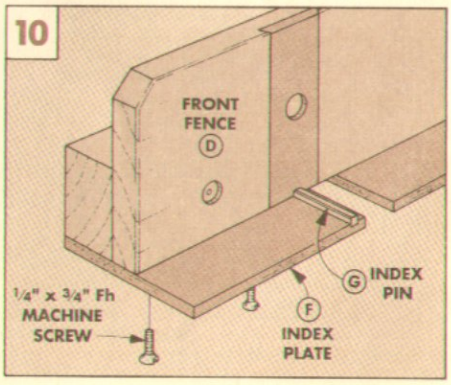

Making Box Joints

A Box Joint Jig solves the biggest problem of making box joints — cutting identically-spaced pins and slots. But it's how you set up the jig that determines how well the pins and slots mate. (Step-by-step instructions on setting up and cutting box joints are shown in the drawings below.)

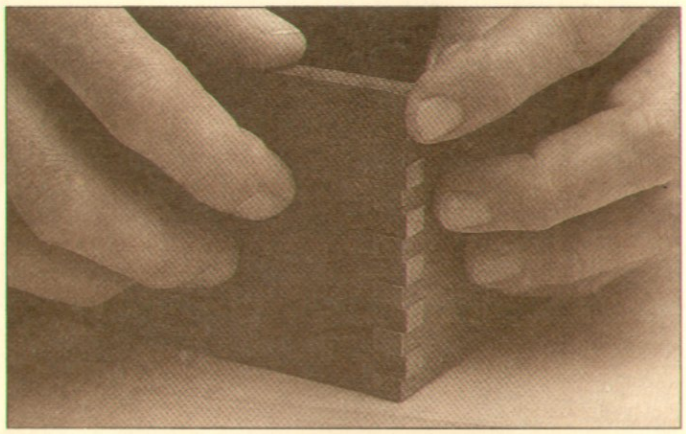

PREPARE STOCK. I start a box joint project by checking that all the stock is a uniform thickness. Then I cut the pieces to length and rip them to rough width to leave about two pins of waste.

After all the pins and slots are cut, I trim the waste to leave one full pin or slot, see Step 6. Shop Note: Mark a waste edge for each piece in advance so you know which edge to trim off later.

SET HEIGHT OF BIT. Now you can begin setting up the jig. First, mount a straight bit in the router table (or dado blade in the table saw). Then, adjust the height to cut a fraction deeper than the thickness of the stock. (I use the workpiece and set it on top of the base of the jig as a depth gauge.) This makes pins that are a fraction longer than the thickness of the stock. (They can be sanded flush after the project is assembled.)

ADJUST INDEX PIN. The position of the index pin is the most important adjustment to make. Moving the index pin slightly *away* from the bit makes the pins wider, producing a tighter joint. Moving the pin *closer* to the bit loosens the fit between the pins and slots.

Before making any cuts on the actual workpieces, I always cut a test joint first to check for fit. On a good box joint, the pins and slots slide together with a friction fit.

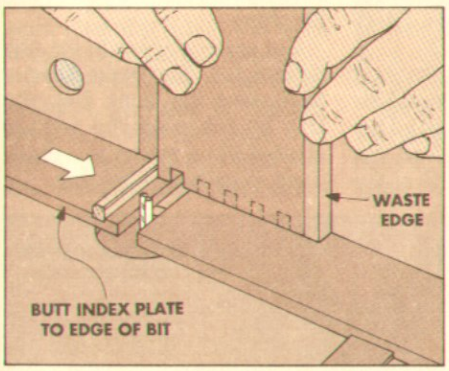

1 *To rout the first slot, set the bit height to thickness of stock. Next slide the index pin plate to the bit, and butt the workpiece to the index pin. Now rout a slot.*

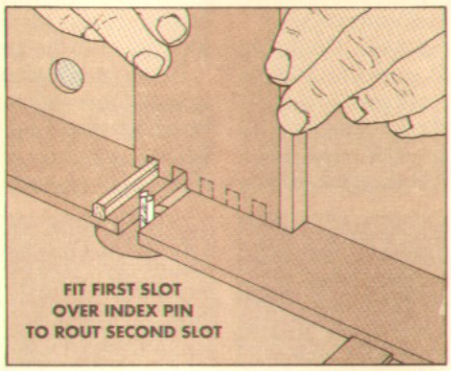

2 *For the second slot, move the workpiece so the first slot straddles the index pin. Hold the workpiece tight to the plates and fence to rout remaining slots.*

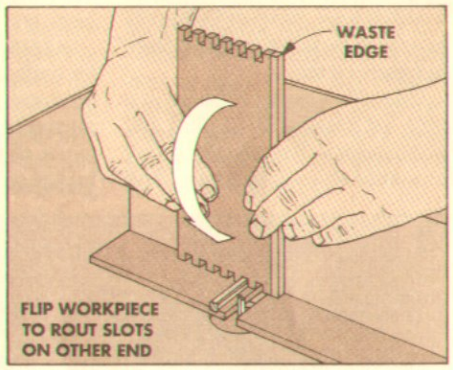

3 *After all the slots are routed on one end, flip the piece end-for-end, keeping the waste edge on the same side. Then rout the pins and slots on the opposite end.*

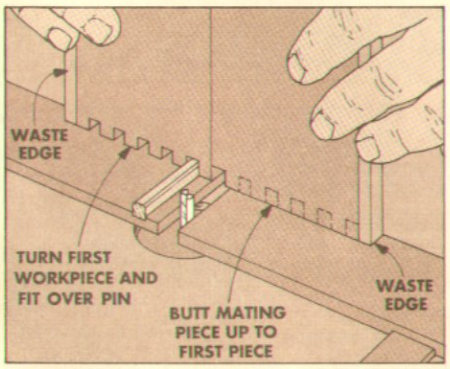

4 *Now turn the first piece around so waste edge is on the opposite side and the first-cut slot fits over pin. Use this setup for routing the first slot in the mating piece.*

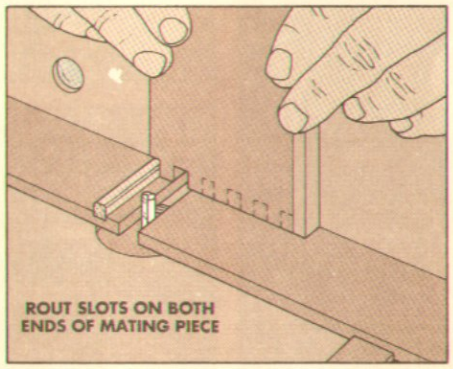

5 *Now, set the first piece aside and slide the just-cut slot up tight to the index pin. Continue this procedure until box joints are routed on all the workpieces.*

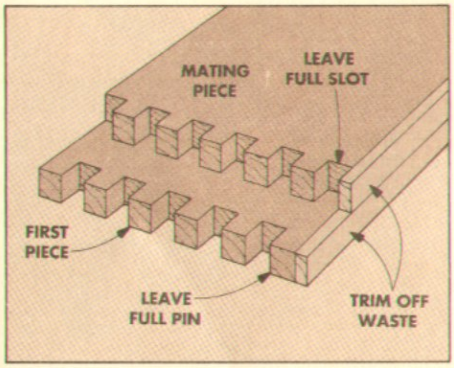

6 *Before assembling the box, rip the waste edge off each piece, leaving a full pin and slot on each edge. The pins should fit the slots with a loose friction fit.*

Sharpening Jigs

I always seem to end up with a big mess when I sharpen tools. It's especially true when I use Japanese waterstones. That's why I was glad to see a solution to this problem among the entries in the Sharpening Tips Contest, announced in *Woodsmith* No. 75.

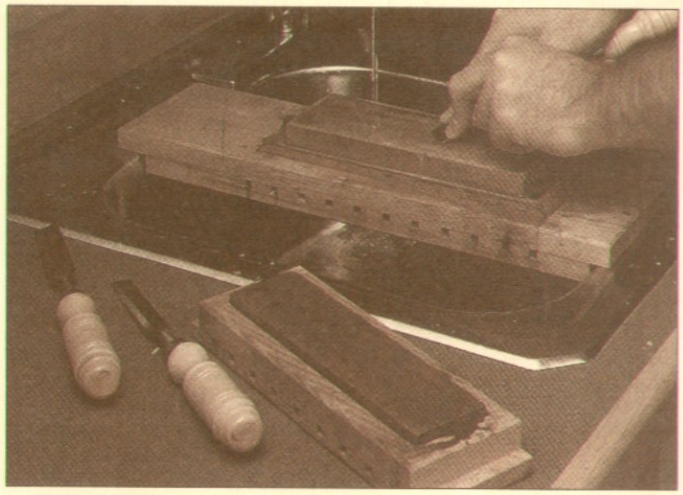

WATERSTONE JIG

James T. Hayden of Falls Church, Virginia solved the problem by building a jig that holds the waterstones over the sink while sharpening, see photo. This way all the mess falls into the sink rather than getting all over the workbench.

The jig spans the bowl of a sink like a bridge, refer to Fig. 3. Then a waterstone with a wooden base (6000 or 8000 grit) is held in position on the bridge between cleats.

The other part of the jig is a tray for smaller 800/1200 grit waterstones that usually aren't mounted on a wooden base. And the tray is sized to fit in the recess made for the larger stone. This way the same jig is used for large and small waterstones.

MAKING THE BASE. The jig can be built to fit *your* sink and waterstones. You'll need to start by measuring the front to back distance of your sink bowl. Cut a bridge so it'll fit snugly inside the top edge of the bowl. Then place your waterstone (with the wooden base) in position on the bridge. (For convenience, I'd offset it closer to the front.)

Next, cut end pieces that butt against the wooden waterstone base and extend ¾" beyond the bridge, see Fig. 3. Now, cut cleats to fit on each side of the waterstone's wooden base.

NOTCHES. Before assembling all the pieces, cut some notches in the surface of the bridge. These help the water drain off the jig, and make it easier to clean up when you're finished.

One way to cut these notches is with a dado blade set ¼" deep, see Fig. 2. Draw a line (on a piece of tape) on the saw table even with the center of the blade. To cut the notches, just stop each kerf at the line, see Fig. 2a. (Note: It's always safer to turn off the saw before backing a workpiece away from the blade.)

TRAY. The bottom of the tray for the smaller stones (800/1200 grit) is sized to fit in the recess on the bridge. Four cleats mounted on the tray surround the stone.

Cut some notches in the tray bottom, too. They make it easier to remove the stone from the tray by relieving the suction created when you try to remove a wet stone from a wet tray.

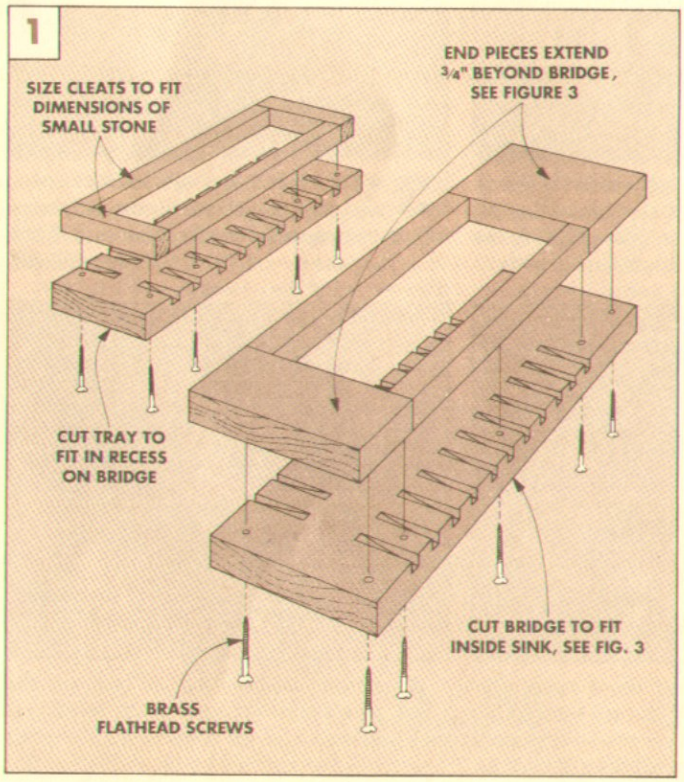

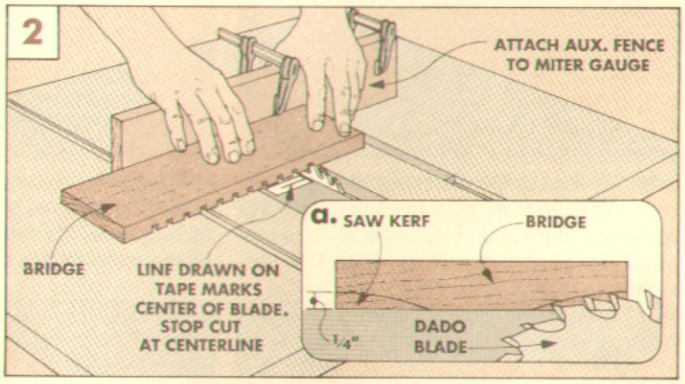

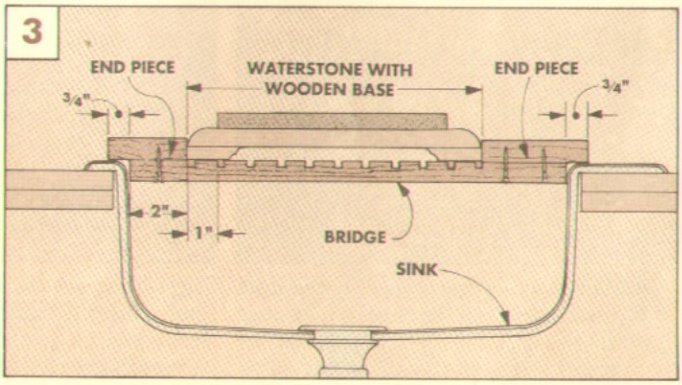

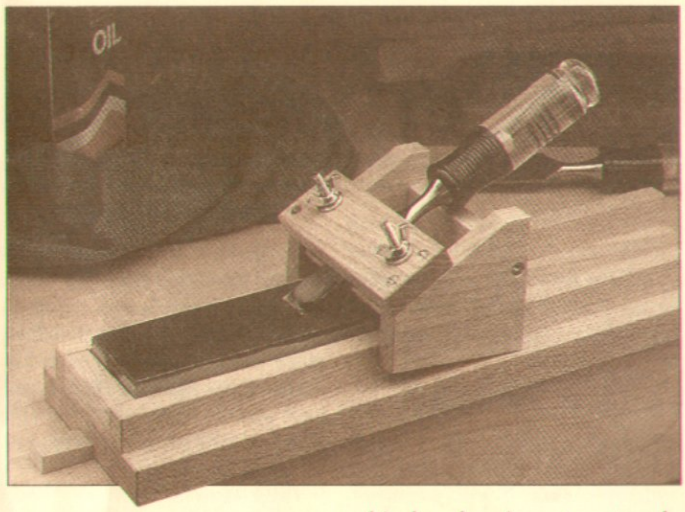

SHARPENING GUIDE

To be honest, I had mixed reactions when I first saw this sharpening guide. But since it looked interesting, I built one and tried it out. And it worked really well.

Like the waterstone jig on the opposite page, this sharpening guide is made to fit your favorite stone. But this guide will work with waterstones or oilstones.

The guide was sent in by **Jules A. Bertero** of Bandon, Oregon. It has two parts — a base that holds the stone in position, and a carriage that holds a chisel or plane iron at a set angle to the stone.

The carriage is built so its sides fit just outside of the rails and run on the base, see photo. The tool mounts in the carriage and the cutting edge slides back and forth over the stone.

One nice feature of this guide is you can pick up the carriage to inspect the cutting edge, then set it down to continue sharpening just where you left off.

BASE. To make this sharpening guide, start with the base, see Fig. 4. To accommodate the size of the carriage, build it 2" wider and 5" longer than your largest, most often used stone. (Smaller stones can be used on the same jig by inserting shims to hold the stone in place.)

The rails serve as cleats to hold the stone, and as guides for the carriage so it will track straight. To ensure that the rails are mounted parallel, they should be glued into shallow dadoes cut on each side of the stone, see Fig. 4.

CARRIAGE. With the base done, you can make the carriage, see Fig. 5. The tool is held between two bars on the front of the carriage, refer to Fig. 6.

The top bar is permanently screwed to the sides. The bottom bar hangs from the top bar by two screws and wing nuts, see Fig. 5. Locate these screws as far apart as possible (at least 2") to accommodate plane irons and other wide cutters. To allow the bottom bar to conform to the shape of the chisel, drill the holes in the top bar oversize.

USING THE GUIDE. To use the sharpening guide, insert the chisel or plane iron between the mounting bars. To get the desired bevel, place the carriage on the base. Then slide the tool in or out between the mounting bars until the bevel rests flat on the stone, see Fig. 6.

Now tighten the wing nuts to draw up the bottom bar against the tool. In use, the bevel rubs on the stone, and the carriage rides on its back corners, see Fig. 6.

Shop Note: When sharpening narrow plane irons and chisels, mount them off center in the carriage. Then, to keep even wear on the stone, turn the stone end for end periodically.

$100 CONTEST

CUTTING PLYWOOD

One of the most difficult jobs in any home shop is cutting large sheets of plywood. So if you have a good technique for safely and accurately cutting plywood down to size, tell us about it.

We'll publish the best plywood cutting techniques and ideas in an upcoming issue of *Woodsmith*. Winners will receive $100 and a *Woodsmith* Master Try Square. Duplicate or similar entries will be considered in the order we receive them. Send your ideas (postmarked no later than January 15, 1991) to Shop Tips Contest, *Woodsmith*, 2200 Grand Ave., Des Moines, Iowa 50312.

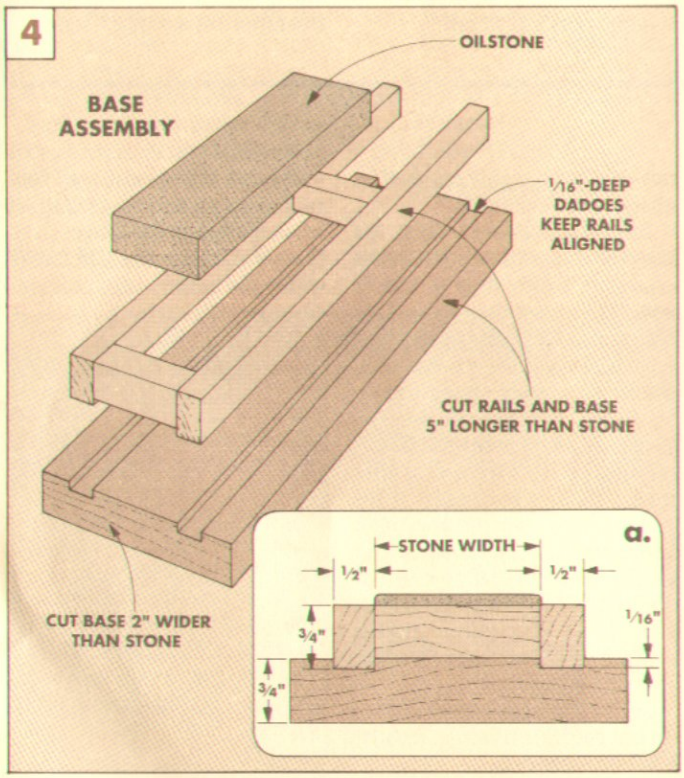

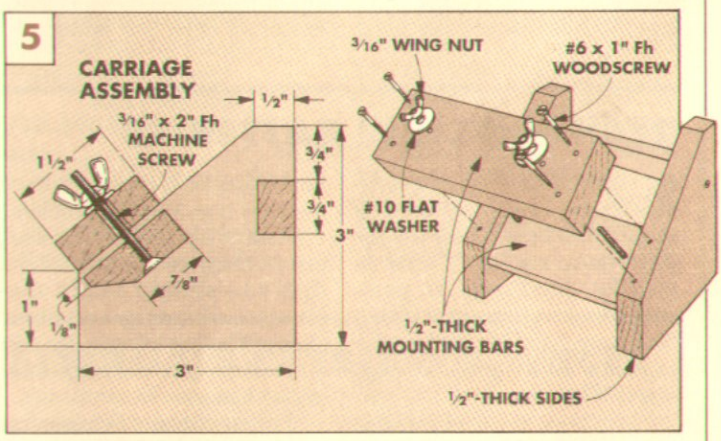

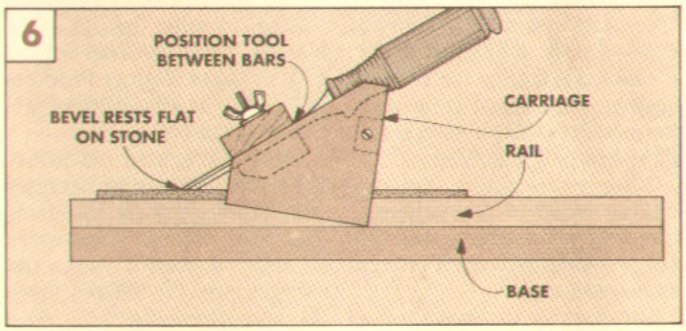

Talking Shop

RUST PREVENTION

■ *It seems like I'm fighting a losing battle against rust. When I leave a tool out overnight in my shop, I come back the next day to find it's already started to rust. Is there anything I can do to prevent this from happening?*

Jack Hardcastle
Ft. Dodge, Iowa

How quickly rust attacks your tools depends primarily on how and where they're stored. If they're kept in a damp basement or garage, you've got a real potential problem.

But no matter where your tools are stored, there are some simple precautions that can be taken to prevent rust from destroying them.

REDUCE HUMIDITY

Rust needs two things to form on tools — moisture and air. If you can reduce or remove one of the two, you'll eliminate the problem. And the easiest one to remove is moisture.

DEHUMIDIFIERS. If the dampness is severe, you may want to invest in a dehumidifying unit.

Besides stopping rust, a dehumidifier in the summer can make working conditions more comfortable. In the winter, you can heat the shop to help reduce moisture.

SILICA GEL. If you store your tools in a confined space (such as a tool box or chest) you can drastically reduce the interior moisture with silica gel crystals. (That's what's in those small bags often found in shipping cartons for electronic equipment.)

One reason I like silica gel crystals is they're reusable. The crystals can be reactived by placing them in a vented oven set at 300° for three hours.

Woodcraft Supply (210 Wood County Industrial Park, P.O. Box 1686, Parkersburg, WV 26102; 800–225–1153) sells a Reusable Air Drier that contains 40 grams of active silica gel. It has a small window on the case to indicate when the crystals should be reactivated.

SEAL THE TOOL

Another approach is to keep moisture *and* air away from the tool by sealing it with a coat of paste wax, paraffin, or a rust preventative treatment.

PASTE WAX. I've used paste wax for years and have never been let down. I apply a coat of wax, let it dry, and then buff it. This not only helps prevent rust, it also allows the tool to glide easily over the wood (or in the case of a saw table, it helps the the wood to glide over the tool).

SILICONE SPRAY. What about using a silicone-based spray such as WD-40?

These sprays work well to remove and prevent rust. But silicone leaves a residue on the tool's surface which can seep into the pores of wood.

This creates a finishing problem often referred to as "fish-eyes" where the finish won't stick to the wood surface because of the silicone. The worst part about "fish-eyes" is you won't see the problem until after a finish is applied.

TREATMENTS. There are, however, a number of silicone-free treatments available, see "Alternate Catalog Sources" on the opposite page.

We found that Boeshield, (available from Woodworker's Supply and Highland Hardware) worked best to prevent rust.

Boeshield is a mixture that penetrates metal to displace moisture and dries to a clean wax that both lubricates and protects. (It also works great for loosening rusted parts.)

One final note: the problem with any applied treatment is it can wear off with use. So keep a close watch and re-apply the treatment on a regular basis.

RECHARGEABLE BATTERIES

■ *I recently purchased a cordless driver/drill. A friend of mine who's been using one for years tells me that I have to totally discharge it periodically to prevent battery "memory." Yet the tool dealer says this isn't a problem anymore. What gives?*

Tim Willis
Atlanta, Georgia

"Memory" refers to a phenomenon associated with rechargeable nickel-cadmium batteries. It occurs when a tool is used infrequently for short periods and then returned to a charger.

The term implies that the battery somehow "remembers" the depth of discharge and will only provide that much energy when used again.

But battery technology has improved to the point where memory is no longer a problem.

Even with these advancements, many people still believe that you should *totally* discharge a battery and then charge it before using it. But this is one of the quickest ways to destroy a battery.

"Frequent deep discharges increase the risk of cell reversal and can shorten the life of the battery," says C.L (Red) Scholefield of Gates Energy Products (one of the leading battery producers in the U.S.).

KEEP BATTERIES CHARGED. Instead of discharging batteries completely, Red recommends that you charge them periodically — even if you're not using them. "A battery loses about 1% of its charge a day when not used, or roughly one-half its charge in two months."

In the *Woodsmith* shop, we keep our spare batteries in the chargers when they're not in use. This way they stay fully charged and are always ready.

TEMPERATURE PROBLEMS. Batteries are also temperature sensitive. They operate best between 50° to 80° Fahrenheit and should be stored within this range whenever possible.

Also, avoid recharging a battery when it's warm to the touch. A warm battery will signal the thermal cut-off switch in the charger to stop the charging process, and the battery will not get a full charge.

So let your battery pack cool down to room temperature before recharging.

On the other extreme, don't recharge or use your battery when it's below 32°. This can seriously damage the chemicals within the battery and cause one or more cells to short.

PROBLEM? QUESTION?

Solving a problem (or avoiding one in the first place) is part of every project. But the best solutions aren't always obvious — they often come from one who's faced the problem before.

If you have a problem, solution, question, or even a gripe, maybe we (or another reader) can help. Just write to *Woodsmith*, Talking Shop, 2200 Grand Avenue, Des Moines, Iowa 50312.

Sources

DISPLAY CABINET

Woodsmith Project Supplies is offering a hardware kit for the Display Cabinet shown on page 6. (Note: We're also offering locks with strike plates for the Gun Cabinet as shown on page 13, see below.)

Cabinet Hardware

778-100 Display Cabinet Hardware Kit.....$59.95

- (5 pair) Inset 3⅛"-Tall Brass Ball-Tip Hinges with Screws
- (4) Brass Door Knobs, 1" Dia., with Screws
- (6) Ball Catches & Strike Plates
- (15) ¼" Spoon-Style Shelf Supports, Brass
- (4) ¼" Threaded Inserts
- (4) ¼" x 1¼" Roundhead Machine Screws

LOCK. We are also offering a keyed lever-type rim lock with two keys to lock up the Display Cabinet (or turn it into a Gun Cabinet as shown on page 13). Though we are selling the locks individually, you may want to order more than one if you want to lock the doors on both the upper and lower cases. Locks will be keyed the same so one key will open both locks.

Each lock you order comes with a bent lever and strike plate (see Fig. 3, page 13) to secure the doors to the cabinet.

Cabinet Lock

778-150 Lock..... $9.95 each

VIX BITS. We find that Vix bits are the easiest way to drill centered holes for mounting hinges such as the inset hinges on the Display Cabinet. They're self-centering in the countersunk holes in the hinges. A No. 5 Vix Bit will drill pilot holes for No. 5 and No. 6 screws. (The inset hinge in the kit uses a No. 6 screw.) A No. 9 Vix bit can be used for No. 8, 9, and 10 screws.

Vix Bits

1505-505 No. 5 Vix Bit .. $8.95
1505-509 No. 9 Vix Bit .. $9.95
771-500 Both Bits $17.95

SEWING BOX

Woodsmith Project Supplies is offering a hardware kit to build the Sewing Box shown on page 18. (Note: This kit does *not* include the fabric or polyester batting for the top. These are available at local fabric stores.)

Sewing Box Hardware

778-200 Sewing Box Hardware Kit.....$6.95

- (2) ¾" Birch Knobs, Screws
- (2) No. 10 x 1" Brass Roundhead Woodscrews
- (16) Brass Rivets with Caps (These have ½" heads and are similar to rivets used for leatherwork.)
- (16) Brass Washers

BOX JOINT JIG

On page 24 we're showing a shop-built Box Joint Jig. The runner on the bottom of the jig that fits in a miter gauge slot could be made with hardwood. But one of the problems with using wood for this runner is that it can expand and contract with changes in humidity. As it expands, it can get tight in the miter gauge slot, and if it should shrink, it will be a sloppy fit.

To prevent this problem, we're offering a hardware kit to make the jig that includes a piece of dimensionally stable phenolic plastic for the runner. Since the width of miter gauge slots varies slightly from manufacturer to manufacturer the phenolic strip in the kit we're selling is oversize (1" wide). Then you can cut it to fit in your miter gauge slot.

Shop Note: Since phenolic is so hard, we recommend using a carbide-tipped saw blade to cut it. Also, the dust created when working phenolic is very fine, so we recommend using a face mask. (This stuff also smells terrible when it's cut.)

Also included in the kit are all the other pieces of hardware and knobs needed for the jig. (Note: Wood is *not* included.)

Box Joint Jig

778-300 Box Joint Jig Hardware.....$8.95

- (1) Phenolic Plastic Runner, ⅜" x 1" x 9"
- (2) 3-Point Plastic Knobs with Brass Inserts for ¼" Bolts
- (2) ¼" x 2½"-Long Carriage Bolts and Washers
- (2) ¼" Threaded Inserts
- (2) ¼" x ¾" Flathead Machine Screws

ROUTER BITS

We used a variety of router bits to build the projects in this issue. **Woodsmith Project Supplies** is offering these high-quality, carbide-tipped bits. Order the shank size to fit your router.

Router Bits

1514-400 ⅜" Rabbeting Bit, (¼" shank) $24.95
1512-450 ⅜" Rabbeting Bit, (½" shank) $26.95
1514-343 5/32" Roman Ogee Bit, (¼" shank) $28.95
1512-356 5/32" Roman Ogee Bit, (½" shank) $31.95
1514-814 ¼" Round-Over Bit, (¼" shank) $23.95
1512-823 ¼" Round-Over Bit, (½" shank) $24.95
1514-819 ½" Round-Over Bit, (¼" shank) $26.95
1512-828 ½" Round-Over Bit, (½" shank) $28.95
1514-721 ½" Corebox Bit (¼" shank) $21.95
1512-730 ½" Corebox Bit (½" shank) $25.95
1514-625 ¼" Straight Bit (¼" shank) $10.95
1512-665 ¼" Straight Bit (½" shank) $12.95
1514-550 ½" Dovetail Bit (¼" shank) $15.95

ORDER INFORMATION

BY MAIL

To order by mail, use the form enclosed with a current issue. The order form includes information on handling and shipping charges, and sales tax. Send your mail order to:

Woodsmith Project Supplies
P.O. Box 10350
Des Moines, IA 50306

BY PHONE

For fastest service use our Toll Free order line. Open Monday through Friday, 8:00 AM to 5:00 PM Central Time.

Before calling, have your VISA, Master Card, or Discover Card ready.

1-800-444-7002

Note: Prices subject to change after February 1992.

ALTERNATE CATALOG SOURCES

Similar hardware and supplies may be found in the following catalogs. Please call each company for a catalog or information.

Constantine's
800–223–8087
Hardware, Locks, Vix Bits

Grizzly Imports, Inc.
800–541–5537
Router Bits, Rust Preventative

Highland Hardware
800–241–6748
Vix Bits, Boeshield, Router Bits

MLCS, Ltd.
800–533–9298
Router Bits

Leichtung Workshops
800–321–6840
Rust Preventative, Router Bits

Shopsmith, Inc.
800–543–7586
Vix Bits, Rust Preventative, Router Bits

Trend-Lines
800–767–9999
Vix Bits, Router Bits

Williams Tool
800–788–0007
Hardware, Rust Preventative, Router Bits

Woodcraft
800–225–1153
Vix Bits, Hardware, Locks, Rust Preventative, Router Bits

The Woodworkers' Store
612–428–2199
Vix Bits, Hardware, Locks, Plastic Knobs, Rust Preventative, Router Bits

Woodworker's Supply
800–645–9292
Hardware, Locks, Boeshield, Router Bits

Final Details

Display Cabinet

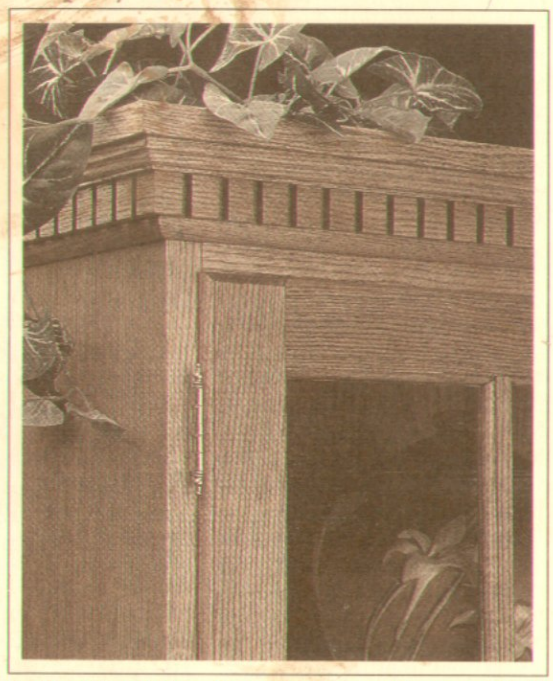

▲ *Dentil molding, Roman ogee moldings, and ball-tipped brass hinges are just some of the details that make this Display Cabinet a classic project.*

Gun Cabinet

▲ *By making a few simple design changes, the Display Cabinet can be built as a Gun Cabinet. We added sturdy locks to both the upper and lower cases.*

Craft Box

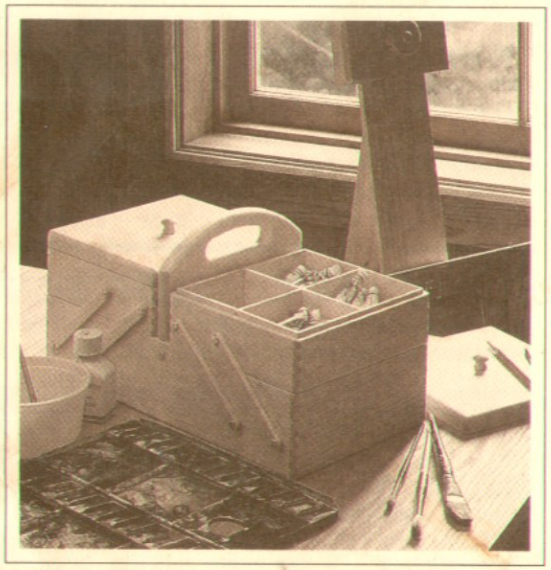

▲ *The Sewing Box featured on pages 18 to 23 can also be used to hold art and craft supplies. For this, we substituted hardwood plywood for the fabric tops.*

Box Joint Jig

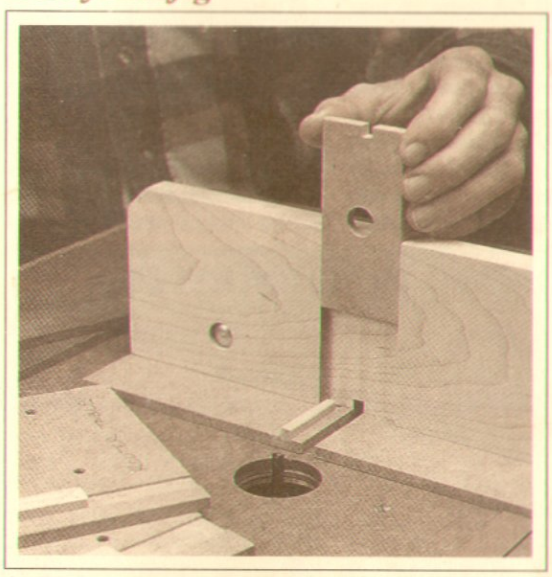

▲ *Replaceable backing plates to prevent chipout and interchangeable index pins make this Box Joint Jig a useful accessory for your router table or table saw.*